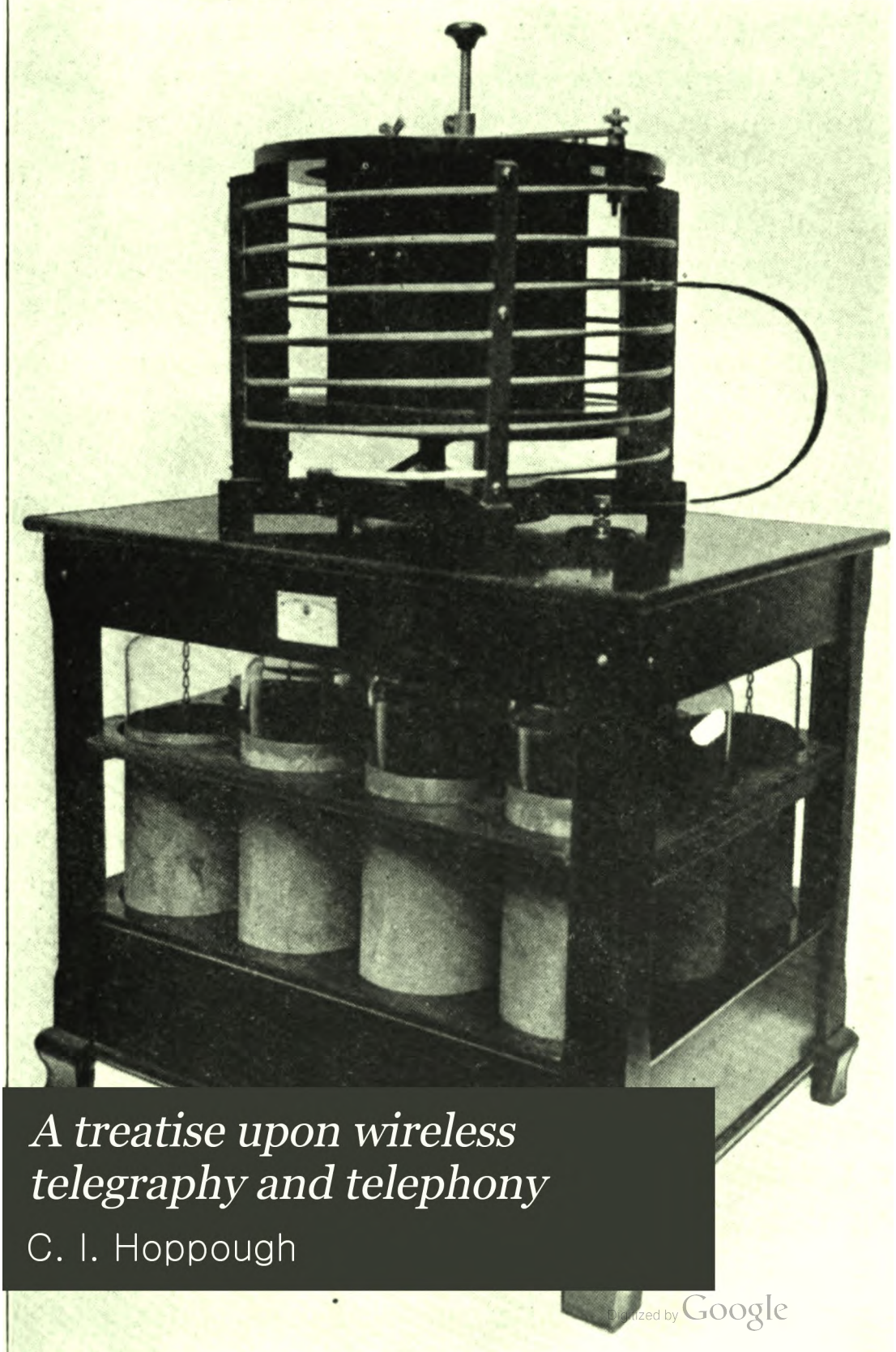

A treatise upon wireless telegraphy and telephony

C. I. Hoppough

Digitized by Google

Digitized by Google

Digitized by Google

Digitized by Google

A TREATISE UPON

WIRELESS TELEGRAPHY

AND

TELEPHONY

BY

C. I. HOPPOUGH

UNIV OF
CALIFORNIA

Digitized by Google

Copyright 1912 by C. I. HOPPOUGH

UNIV OF CALIFORNIA

Digitized by Google

PREFACE.

While serving as Inspector for the United Wireless Telegraph Company, the attention of the author was frequently called to the inability of operators to efficiently use the apparatus installed for Radio communication over which they had supervision. This inability could almost invariably be traced to either a misapplication of the principles governing the action of certain instruments of the equipment, or a deficiency of knowledge concerning these principles. Many operators, having had no previous training, were unable to master the technical explanations given by some of the prominent authors of treatises upon Wireless Telegraphy on account of the mathematical reasoning employed by them.

While it is impossible to go deeply into the study of Wireless Telegraphy without the aid of higher mathematics, an attempt will be made in this book to explain in as unmathematical terms as possible a few of the fundamental principles and to illustrate their application to the solution of practical problems which arise daily in the routine of wireless operating.

Fortunate indeed is the student of wireless telegraphy who has had the opportunity of studying "The Principles of Electric Wave Telegraphy and Telephony", by J. A. Fleming, and the "Principles of Wireless Telegraphy", by Geo. W. Pierce, and it is on account of the clearness of the explanations and the reliability of information given in the above mentioned books that they will be quoted in the following pages.

The author wishes to mention his obligation to the Wireless News and Publishing Co., Sampson Publishing Co., Clapp-Eastham Co. and the Electro Importing Co. for permission to use certain illustrations furnished by them; to the Standard Wireless Equipment Co. for the loan of equipment tested; to Mr. J. M. Baskerville for the loan of a number of photographs of equipment which have materially assisted in explanations; and finally to Mr. G. M. Dodge, whose friendly assistance has made the publication of this book possible.

THE AUTHOR.

260018

Digitized by Google

Digitized by Google

UNIV. OF CALIFORNIA

CHAPTER I.

Relating to Matter, Motion and the Ether.

Matter and the Molecule.

Matter has been defined as "everything in the universe" which may be divided into very minute portions which themselves can undergo no further division. Consider a piece of glass. It may be broken up into divisions the size of a pea, crushed into crystals, from crystals into a coarse powder and finally into dust. It would be sensible to believe that this dividing up process could continue indefinitely, but scientists have discovered that this is not the case and that there are small particles which can undergo no further physical division. These particles are called *Molecules* and every body of matter except the molecule is composed of exceedingly "small particles called molecules." Millions of molecules may exist in a cubic inch of glass, yet *no two molecules in this cubic inch are in permanent contact with each other,* but instead are always in vibration and are making small excursions, hitting and rebounding from the neighboring molecules.

Motion, Force and Inertia.

Motion is a progressive change of position. By a little thought upon the subject, we may easily see that no motion can result unless something has caused it. This cause we term force and *Force is the cause which produces or tends to produce motion.* No motion can result unless force caused it, and matter in motion cannot instantly cease its motion. If a boy riding a bicycle at a high rate of speed suddenly collides with an obstacle he does not instantly stop, but tends to continue his motion as before the collision took place. If a freight car is standing upon a track, it may take several men to start it moving yet requires less men to keep it in motion after started. A body at rest remains at rest, and a body in motion moves with a uniform velocity and in a straight line, unless acted upon by some external force. The tendency of a body to remain in motion if moving or to stay at rest if stationary is called *Inertia.*

Digitized by Google

Work.

Whenever a force acts in such a manner as to produce motion or a tendency to move, it does *work*. Work must be done upon a body before it will move and as we have seen that motion is the result of a force acting we may define "work as the result of force."

Energy.

Energy may be defined as the capacity of a body or force for doing work. Has the bell in a church tower energy? How did it get there? Was not work necessary to place it in such a position? Were the bell attached to a rope and suitable machinery arranged, we might be able to recover some of the work done in raising it to its position in the tower. So we are sure that even at rest the bell possesses possibilities of doing work and this possibility we term Potential Energy. A body in motion possesses energy and this energy is termed Kinetic Energy.

Source of Energy.

We are taught that the source of our energy is the sun. Now the air we breathe forms a gaseous shell around the earth which is about thirty-five miles thick. There is no gas which man has ever seen, heard, felt, tasted, smelled or measured existing outside of the air shell of the earth. Yet we contend that energy comes to us from the sun through this space which contains no-thing. This is naturally an impossibility. One would look foolish indeed attempting to acquire a speed of ten miles per hour by peddling a bicycle whose chain was off,—that is, attempting to produce *motion* through *nothing*. Yet this is apparently what the sun is doing—producing energy upon the earth in the form of heat and light through several million miles of *nothing*. As the sun's heat may be made to do work, we could in this manner get work done with no expenditure of energy. Again, this is impossible. Therefore *we must assume* that there is some medium filling all space not otherwisely occupied and this medium has received the name of *Ether*. Although no man has proven its existence through any chemical or physical process, there are actions which take place in space devoid of all matter which occur just as they would occur if the space were filled with something with which man is acquainted, and as nothing has been discovered which would account even in part for these actions, we must accept the existence of a

Digitized by Google

medium for the transmission of certain forms of energy which for the lack of a better name is termed *Ether*.

Radiation and Radiators.

The transmission of energy through the ether is termed *Radiation*; energy so transmitted is called *Radiant Energy* and a body emitting energy thus is termed a *Radiator*.

Waves.

By simple reasoning, it is obviously inconceivable that any action can take place at a distance from its cause without the aid of some medium intervening.

If an electrical bell operated by a battery be placed in a glass jar and the air gradually exhausted, the sound it produces will diminish until finally no sound is heard when the vacuum is the greatest. Yet it is easy to see that the bell's hammer is still striking the metal. If the air be permitted to re-enter the jar, sound is re-established, proving that sound is related in some way to air. Numerous other experiments which could be performed would assist in proving that sound is a sense and that hearing is caused by air vibrations. A steel spring held in a vise can be made to vibrate yet its vibratory motion will not affect any other object, causing it to vibrate, unless there again be some intervening medium through which this energy is transferred.

Further consideration along the line of air vibrations will prove to us that in reality when air is set in violent motion places of alternate rarefaction and condensation are produced and energy transferred in this manner is propogated by what we term *wave-motion*.

It is very apparent that we would be able to see the bell in a jar such as described above even though the air is exhausted from the jar, thus proving that light is independent of air. We will not attempt here to explain the various steps by which scientists have, after years of persistent experimenting and careful study, arrived at the conclusion that heat and light are in reality ether vibrations, that their source is the sun and that the energy is communicated to us by etheric waves. However, these matters are past discussion if we admit the existence of an ether, and if admitted we must then consider it as a something which pervades all space, even penetrating between the molecules of all ordinary matter; that is, the molecules of matter are embedded in ether and are in reality con-

Digitized by Google

nected to one another by it. We know little of its properties, yet anything which can sustain wave motion must be elastic, and finally we may define ether as a medium for the transmission of energy in the form of vibrations.

Careful scientific research has resulted in establishing some facts relative to ether vibration: If it vibrates from 430 to 740 trillion times per second it produces wave motion which is propagated with a velocity of 300 million meters per second and produces the sensation of light: if between 300 and 20 trillion per second our sense of feeling detects the vibrations and we experience the sensation of heat.

Hertzian Waves.

When ether vibrates from three billion to one hundred thousand times per second an effect different from either heat or light results, producing what are known as electric or Hertzian waves and the production and detection of Hertzian waves is of vital interest to a student of wireless telegraphy as it is by their means that energy is transferred from one place to another without the aid of any intervening medium except the ether. Wireless telegraphy can then be termed *Etheric Wave Telegraphy.*

To date no method has been discovered by which the ether can be set in motion except by rapidly vibrating charges of electricity, so that in reality a study of wireless telegraphy becomes a discussion of the different methods employed by various inventors and experimenters in their attempts to set electricity in more or less rapid vibration, thus producing ether waves, which by specially designed apparatus, can be transformed at a distance into some effect which our finer senses can detect.

Digitized by Google

CHAPTER II.

Electricity and Magnetism.

What is Electricity?

This is one of the ever asked yet never answered questions. Electricity is not a form of energy. Were we to put air under pressure in a reservoir, we could, by means of suitable machinery, make the air do work. Hence, we could say that air under pressure possesses energy. We could also say that water flowing from a reservoir above the level of the surrounding earth, when turning a water wheel and driving machinery possesses energy, but we could not say that either water or air are forms of energy. And. as said, electricity itself is not a form of energy. The methods of producing electricity are merely methods of disturbing electrical equilibrium.

Potential Difference.

It is commonly understood that water will not rise in a vertical pipe unless there first has been a difference of pressure established somewhere in the piping system. Water will flow down hill unassisted because there is a difference of water level. When this water is in motion it possesses energy. Analogously, electricity will flow only where there is a difference of *electrical pressure.* The difference in electrical pressure is commonly known as *Difference of Electrical Potential.*

Methods of Producing Electricity.

The ancient Greeks were acquainted with the fact that when amber is rubbed with a cloth like our flannel it possesses the property of attracting to it sulphur and other small masses. The word "Electricity" is derived from the Greek word "Elektron", meaning amber.

Charges.

If a glass rod be rubbed vigorously with a silk cloth it will attract small pieces of paper.

Rub a rod of hard rubber with a piece of woolen cloth; this

Digitized by Google

also will be seen to attract small bits of paper as in Fig. 1. Suspend two small pith balls from a fixed support by means of a fine silk thread; charge each of the pith balls separately by bringing them in contact with a glass rod, after it has been rubbed with

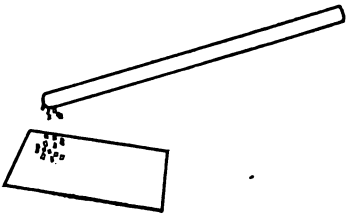

Fig. 1.

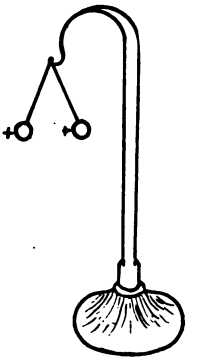

Fig. 2.

silk; try bringing these pith balls together, being careful not to touch either in the process. Instead of attracting one another, it is readily seen that they repel and assume the position shown in Fig. 2.

Repeat the experiment with other pith balls, but in this case, charge them with the electricity generated by friction between the hard rubber and flannel. Again the pith balls are seen to repel each other. Electricity generated by the glass rod and silk is termed *positive* electricity, while that existing on the ebonite after having been rubbed by the woolen cloth is termed *negative* electricity.

Now charge one of the pith balls used in the last experiment with positive electricity and the other with negative, keeping them some distance apart during the process. Bring one near the other. Unlike the action in the former experiments, the observer will notice that they attract each other in a marked manner. We can therefore adopt the conclusion from these three experiments that "bodies charged with electricity of the same kind repel each other, while bodies charged with electricity of different kinds attract each other." As bodies attract each other by virtue of the electricity present upon them, and as it can be easily proven by numerous other experiments that bodies charged with electricity will always act in this manner the conclusion arrived at by the result of these experiments becomes a law that "like charges repel, and unlike charges attract."

Digitized by Google

The Electroscope.

This is an instrument used to detect the presence of small charges of electricity. It usually consists of two strips of gold foil (Fig. 3) attached to a brass rod, and placed within a glass jar. The upper end of the brass rod "r" is brought through the stopper of the jar to an accessible position outside the jar.

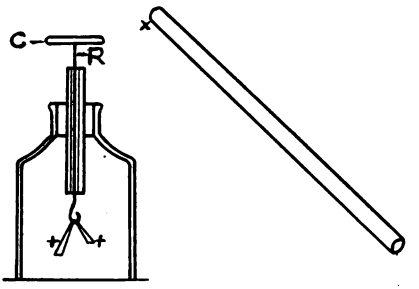

Fig. 3.

If an unelectrified body be brought near the rod or even in contact with it, no change is noticed in the positions of the two strips of gold foil. However, if an electrified or charged body be brought near or in contact with the brass rod or its top "C", the pieces of foil will be seen to fly apart, and in this way indicate the presence of a charge of electricity on the body.

Conduction.

Hold a brass rod firmly in the hand and rub vigorously with warm silk. By means of the electroscope, ascertain if there be a charge upon the brass tube. It will be seen that the gold foil is unaffected. Next wrap a piece of sheet rubber around one end of the brass tube and rub it with the silk as before, taking care not to touch the brass with the hand or other object. Test again for the presence of Electricity. Notice that the leaves of the electroscope diverge, thus showing the presence of a charge. As the action was the same, it would be absurd to presume that electricity was not generated in both cases, but this inconsistency is explained by supposing that in the first operation electricity escaped by being conducted through the hand and spread over the body of the experimenter, so that the remaining charge was at least a very small one and is not detected by the electroscope. This action of spreading is called "grounding" and the charge was dissipated by *Conduction.*

Digitized by Google

In the second operation the sheet of rubber between the hand and the brass tube prevented the escape of the charge, and its concentrated effect was detected by the electroscope.

Conductors and Insulators.

All substances which offer great resistances to the passage of electricity through them or over their surfaces are termed Non-Conductors, Insulators, or Dielectrics. Substances which offer little resistance to the passage through them or over their surface are termed Conductors. Copper, silver, aluminum, iron, and in fact, nearly all other metals are conductors, while mica, glass, dry air, rubber, silk, dry wood, and paraffin are Non-Conductors. Moisture injures the insulating properties of any substance, and in fact, many very good insulators become fair conductors by being dampened.

A pipe will not hold water at a great pressure unless its walls be of sufficient thickness to withstand the strain. Likewise, a charged body must be surrounded by some kind of material which will offer sufficient resistance to the escape of electricity in order to retain its electrified condition. Charged bodies thus surrounded are said to be *Insulated.*

Induction.

Obtain an empty egg shell and cover the outside with tin foil. Suspend from a fixed support by means of a silk thread. Electrify a glass rod and bring it near the shell. Attraction between the rod and the shell is noticed. Place a glass plate between the rod and shell and repeat the experiment. The same action is observed, showing that electrical effects are noticed even through a dielectric. Such electrical action is termed *Induction* and a charge upon the egg shell can be detected by means of an electroscope. The charge produced upon the shell in this manner is known as *Induced Electricity.*

Any charge produced by induction is always opposite in kind (positive or negative) to that of the inducing charge, and induction always precedes attraction.

Lines of Force.

As suggested before, the production of electricity is merely disturbing the electrical equilibrium. By exhausting the air from a glass vessel and bringing an electrified glass rod near it, a pith ball suspended within will be seen to act in the same manner as it would

Digitized by Google

if suspended in a vessel containing air, showing that electricity is acting through the ether as well as it would through air. The charge upon the rod really consists of a strain in the ether surrounding the rod. The most easily understood way to represent the strain is a graphical one, representing it as though there were real lines existing around a charged body. We term these *Lines of Force* and they are merely lines drawn through the region which is in a state of strain to represent the condition and such a region is termed an *Electric Field.*

Prof. J. H. Cloud, in his book, "Principles of Physics", has made an electrical field easily understood and says that "if a small body whose inertia is negligible be positively charged and placed in an electric field, it will move in the directions of the lines of force." Also, "that lines of force cannot cross each other, for if they did it would mean that a positively charged body placed at the point of crossing would have to move in two directions at the same time."

Electro Statics and Electro Kinetics.

The electricity described in this chapter has been produced by the friction of one body upon another, and is commonly known as *Frictional Electricity* and has sometimes erroneously been called Static Electricity. However, electricity, if it be in a state of rest is correctly termed *Static Electricity,* while if in motion upon the surface of a body or through it, is termed *Kinetic Electricity.*

Kinetic Electricity.

Potential is not electricity but is merely the strain tending to produce a movement of charges toward a point of lower electrical pressure.

Potential is spoken of as Electro Motive Force (E. M. F.) and is practically measured in *volts,* and there must always be a difference of potential before there is a transfer of electricity.

A type of machine known as a Static Machine or Wimhurst Machine is shown in Fig. 4. This machine generates electricity by friction and produces electricity of great E. M. F. but small current strength. It is used extensively to charge condenser jars and in electro-therapeutics.

Electricity Generated by Chemical Action.

In the preceding paragraphs we have dealt with electricity generated by means of friction between two bodies, also electricity in

Digitized by Google

the state of rest which we term Static. However, generation of electricity by friction may result in very high potential, i. e., voltage, and the strength of the current is very limited so that in

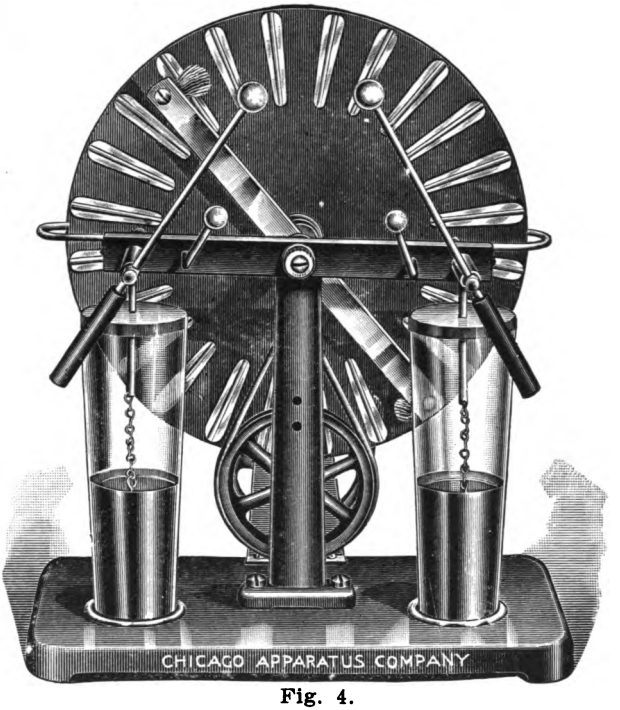

Fig. 4.

order to produce the effect which we desire, we must employ other methods than generation by friction.

Pour two or three teaspoonfuls of sulphuric acid into a tumbler of water. Immerse a strip of zinc about one and one-half inches wide in the solution. It will be seen that bubbles of gas arise to the surface, caused by the chemical action of the acid upon the zinc. Now remove the zinc and introduce into the solution a strip of the same size which has been amalgamated. (Amalgamate means coating the zinc with mercury.) It will be noticed that very few, if any, bubbles of gas arise to the surface of the liquid. Next place a strip of copper of the same size as the zinc strip in the liquid, but do not allow the two metals to touch each other. No bubbles will rise from either metal. Electrically connect the two metals by means of a copper wire as in Fig. 5. A somewhat inconsistent action now takes place, as the bubbles will rise from the copper, but as we know, copper is not acted upon by the sulphuric

Digitized by Google

acid, and in fact, we might leave the copper in the acid solution for a long time and yet no disintegration of the copper could be noticed. So we must conclude that appearances are deceptive and

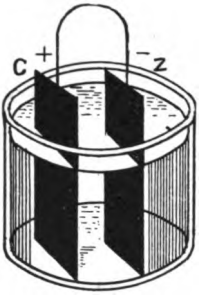

Fig. 5.

that connecting the two metals with a conductor serves some peculiar purpose.

Galvanometers.

A galvanometer is an instrument for the purpose of detecting or measuring small currents of electricity. One form of this instrument is shown in Fig. 6 which is known as a Tangent Gal-

Fig. 6.

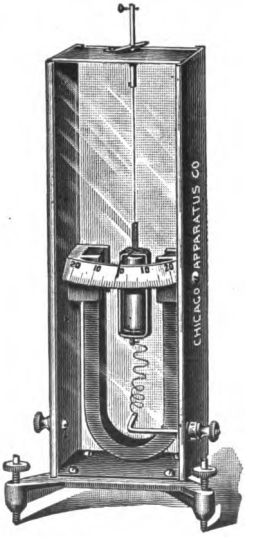

Fig. 7.

vanometer. Another form is shown in Fig. 7 which is known as D'Arsonval Galvanometer. The principles upon which these instruments work will be described later.

Digitized by Google

A simple form which will answer the purpose for the experiments here consists of a magnetic needle or compass supported and free to swing upon a pivot, and having a coil at right angles to a normal position of the needle, and under and over it. The coils of wire are continuous, and have their ends brought out to binding posts.

Using the apparatus employed in the last experiment, connect the wires leading from the copper and zinc strips to the binding posts of the galvanometer. The presence of a current of electricity will be proven by the needle of the galvanometer being deflected. Its generation must necessarily have taken place by the chemical action of the acid upon the metals. The solution of acid and water is termed an "Electrolyte", and it can be shown by experiment that the free end of the wire leading from the copper plate is charged with positive electricity, and that leading from the zinc, with negative. When we bring these two in contact, a discharge takes place but is continuous, hence there will be a continuous flow of current as long as the contact is maintained, until polarization takes place (described later), the metals are eaten away by the acids or the electroyle itself entirely decomposed. The wire or conductor when continuous, whether it may have a galvanometer or other electrical instrument connected to it, is called an *Electrical Circuit.*

In order to have any marked flow of current, there need be an electro-chemical difference between the metal plates in the solution of acid. This means that one plate must be more actively attacked by the acid than the other and the greater the difference in the activity of action upon the plates, the greater the difference of potential or pressure. This arrangement of metals in a solution is called a *Voltaic Cell.*

Polarization.

Construct a voltaic cell employing unamalgamated zinc and copper. Connect this cell to a galvanometer and notice the deflection of the instrument needle decreases in a short time. It will also be noticed that there is a collection of bubbles of gas upon the copper plate which do not rise to the surface. This gas is hydrogen and is always liberated when an acid acts upon zinc. Now, hydrogen is a very good insulator and this collection of hydrogen gas upon the plate serves to stop the flow of the current and in this way equalizes the difference of potential between the

Digitized by Google

plates of the cell. Hence, less current flows. This gathering of gas upon one plate of the cell is termed Polarization and as can readily be seen is a detriment to the efficiency of the cell because there is less area of metal exposed for action. One remedy for this would be to keep the plate in motion thus shaking the bubbles free. However this is not practical, and the usual method employed is to mix with the electrolyte some chemical which will absorb the hydrogen. Such a chemical is termed *Depolarizer.*

Effects Produced by Electrical Currents.

The effects produced by means of electric current may be classified into the following divisions,—Electrolytic, Thermal, Physical, and Magnetic.

Electrolytic Effects.

Dissolve some potassium iodide, obtainable at any drug store, in water, (care should be taken in handling potassium iodide as it is very poisonous) and make a paste by boiling starch in water. Stir a small quantity of paste into the solution of potassium iodide. Next wet a piece of blotting paper with the liquid and spread the paper upon a sheet of copper. Connect two cells together and join the negative terminal of the battery to the copper plate. Draw the positive terminal over the moist paper. A mark is produced by the electrode upon the blotting paper.

Thermal Effect.

This is most commonly illustrated by the passage of a current through the filament of our incandescent lamp bulb which becomes heated and then produces luminous effects.

Physical Effect.

Place the terminals of the wire leading from one cell of a battery upon the tongue. A slight acid taste is sensed.

Magnetic Effect.

Obtain a piece of iron, a bolt will answer the purpose, and wind around it several turns of a continuous insulated copper wire. Upon connecting the two ends of the wire to a voltaic cell, iron filings will be seen to be attracted to the bolt, thus proving that the bolt has become magnetized.

Production of Electricity for Commercial Purposes.

Now, we have seen electricity produced by friction and chemical action. It would, however, be a very expensive method to de-

Digitized by Google

pend upon the chemical action for our electric lights, so we must resort to some other method of producing a flow of current. One method which was thought years ago to be the solution of this problem, was to produce electricity by heating the junction of two dissimilar metals such as copper and iron, but as only a small difference of potential can be created by even an immense amount of heating, this method was, like the chemical method, too expensive. However, it was found that by revolving a conductor in a magnetic field a flow of current was produced upon the conductor if continuous. But before going into the details of the action it is necessary to ascertain exactly what a magnetic field is, and as nearly as possible, the nature of magnetism.

Digitized by Google

MAGNETISM.

Years ago the Greeks were familiar with the fact that certain minerals possessed the faculty of attracting to them small particles of iron. We call this mineral Lodestone, and its scientific name is Ferric oxide. It is of a dark iron gray color and is found in great quantities in Sweden, Russia, and also in the state of Arkansas. The substances which are attracted by this natural magnet are termed *magnetic substances,* of which iron is the most common example. Any substance which is not attracted is termed Diamagnetic to distinguish it from the opposite kind.

Magnets.

The needle of a compass possesses the power of attracting iron filings to it. This property defines it as a magnet, and if a magnet is long in comparison to its diameter and is capable of being suspended free to swing upon its supporting medium, it will take a position pointing north and south. We might say that the earth is a magnet as it possesses two magnetic poles, which is proven by the compass always taking a certain position.

Using a common bar magnet bring the end marked "N" near the North end of a compass. As will be seen, that end of the needle will attempt to draw away from the magnet. Try the same on the South end of the needle, using the end of the magnet marked "S". The same result is seen to follow. Now bring the "N" end of the bar magnet near the south end of the compass needle. This time the result is entirely different, inasmuch as the two ends of the magnets attract each other.

Attraction of Magnets.

From this experiment we may conclude that *"like magnetic poles repel each other and unlike poles attract each other."* As this law is the basis of calculation for the designing of all electric motors, it should be well understood.

Limitations of Magnetic Field.

There is a certain distance from a magnet in which we are able to detect its presence by means of the deflection of a compass needle. Just how far this distance extends we do not know, but as we increase the sensibility of our detector instrument, the greater distance we could travel from the magnet and still detect

Digitized by Google

its presence. Hence, it might be concluded that the distance is infinite.

Magnetic Field and Lines of Force.

Provide an ordinary piece of window glass and under it upon a table place a bar magnet. Sprinkle some fine iron filings over the glass and tap it gently. The iron filings arrange themselves in defined lines. It is obvious that some force is acting upon these filings which makes them arrange themselves as in Fig. 8, and if the magnet were removed and the glass again gently tapped, the

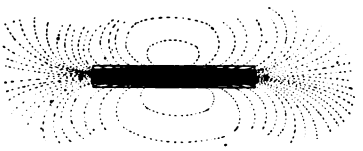

Fig. 8.

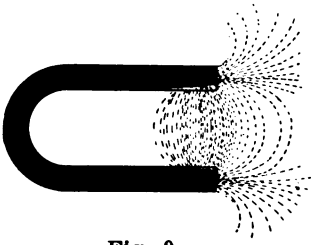

Fig. 9.

filings at once become irregularly arranged. This force acting upon the filings is Magnetism and the filings tend to arrange themselves in a certain position depending upon the direction of the forces which are acting upon them. Fig. 9 shows the positions taken when a horseshoe magnet is substituted for the bar magnet. In each case these filings, as is seen, are arranged in curved lines. These lines are called *Magnetic Lines of Force,* and are always present around any magnetized body.

Every magnet has two poles, a positive and negative, and the two ends with respect to the strength of the curved lines are always equal.

By using different kinds of iron, we find that some are more difficult to magnetize than others. However, the more difficult it is to magnetize a piece of iron, the better it retains the magnetism, and this fact explains why for a permanent magnet we use very hard steel and for the core of a magnet where it is desirous to strengthen or weaken it at will, very soft iron is best used.

Permeability.

Magnetism permeates (penetrates) some metals much better than others, and this comparison is termed *Permeability* of the metal. Wrought iron is most permeable and cast iron has the

Digitized by Google

least permeability of the common metals. Hard steel has small permeability. However, wrought iron has less retentivity than steel, that is, retains magnetism a shorter time. Iron is made up of molecules and it is thought that a bar of iron in a diamagnetic condition has its molecules arranged in a very unsymmetrical order, but when the iron is suddenly magnetized, the molecules tend to

Fig. 10.

arrange themselves in a condition which places them something as shown in Fig. 10, the positive and negative ends forming a chain through the magnet. Were we to strike a magnet a sharp blow, the molecules would be disarranged and thus their forces neutralized. The magnetic force is always most apparent at the ends of the magnet. Try the experiment of hanging some small steel tacks end to end by means of magnetic attraction upon the end of a six inch bar magnet. As we approach the middle of the magnet, it is found that we are unable to make as many tacks hang together as at its ends. This proves that the magnetic force is not as strong in the middle of a magnet as at its ends.

Kinds of Magnets.

We may divide all magnets into two classes, Permanent and Electro. A permanent magnet is one which retains its magnetism after being magnetized. A permanent magnet, if struck a hard blow does not lose its magnetism, but rather the molecules become jumbled up, though still retain their magnetism, and thus the magnet as a whole loses its polarity. Hence, it might be more correct to say that a permanent magnet is one that retains its polarity.

Permanent magnets are used in our telephone receivers and in the magneto-electric machines which are used as sparkers for our gas engines.

An electro-magnet is one whose magnetism can be established by the flow of an electric current near or around it, or by induction from another magnet, and it is generally understood that it should lose its magnetic property after the outside influence is taken away. By passing wire carrying a heavy continuous current through a sheet of cardboard and sprinkling a quantity of very fine iron filings over the cardboard, the presence of a magnetic field around the wire is shown by the filings arranging themselves

Digitized by Google

in circles around the wire as shown in Fig. 11. This is termed an *"Electro-Magnetic Field."* We have also seen that a magnetic field will affect a compass needle as in a preceding article. Wind a few turns of insulated wire around a bolt as in

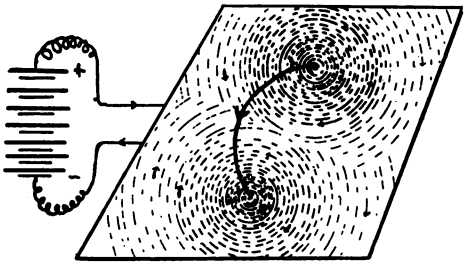

Fig. 11.

a former experiment and pass a current through the wire. By bringing this arrangement near a compass needle and by making and breaking the electrical circuit the compass goes through a succession of movements proving that when the current is flowing around the core, magnetic force is produced, and that when current is not flowing the presence of magnetism in the core is not noticeable. Such an arrangement of wire and iron is called an Electro-Magnet. The pole of an electro-magnet is generally known to be the end of the core, and by strength of the magnet we mean the actual quantity of magnetism flowing from the pole pieces. This quantity is measured by means of units, one of which is called a line of Flux. A block of wood one inch square and wrapped with one complete turn of wire through which one "ampere" of current is passed produces about three lines of magnetic flux. *Flux* is the total quantity of magnetism. *Density* is the flux per square inch. The flux of a magnet may be found by multiplying the density by the area of the pole in square inches.

Magnetizing Force or Magneto Motive Force is the force which causes magnetism to flow out of a pole piece, and it should be remembered that a line of force always makes a complete circuit from one pole to the other. Magnetizing force is measured in Ampere Turns, as one turn which is carrying one ampere of current always causes a certain flux. The flux of a magnet depends upon the length of its core, the number of turns of wire in the coil, the current in the coil, the material of which the core is constructed and its shape. A bar of wrought iron 1 inch long and 1⅛ inches in diameter wrapped with 500 ampere turns will give

Digitized by Google

a flux of about 115,000 lines. However, if this bar were 10 inches long wrapped with the same number of turns, it would only produce a flux of about 90,000 lines. The discrepancy of the 25,000 lines comes from the fact that although the iron is a good conductor of magnetism, it offers *some* resistance to the flux, and the longer the core necessarily the greater the resistance to be overcome and consequently a loss occurs. The more flux in a core, the greater the magnetizing force necessary to give additional lines to it.

Reluctance is the total opposition to the passage of flux through a substance. *Reluctivity* is the reluctance of a piece of material 1 inch long and 1 inch square. *Permeance* is the total conductivity of a substance for flux. All magnetic materials when once magnetized or when temporarily magnetized, retain a certain amount of magnetism after the magnetizing influence is withdrawn. The magnetism that remains is called *Residual Magnetism* and the residual magnetism per cubic inch in called the *Retentivity.*

Magnetic Circuits.

It has been stated here that a line of flux makes a complete circuit from one pole of the magnet to the other. This is called a *Magnetic Circuit.* We often speak of closed and open magnetic circuits. By a closed circuit is meant one composed entirely of magnetic material, while an open circuit is one with an air gap in it. The air gap may be as long as the core itself which is illustrated in the case of a straight bar magnet.

Law of Magnetic Circuits.

Flux equals the magnetizing force divided by reluctance. Ampere turns equals flux times the reluctance divided by 1.25. It must be remembered that no matter what may be the size of the core, the flux or density per square inch of a magnet depends entirely upon the number of ampere turns on each inch of its length.

The *Traction* of a magnet is the weight it can sustain when attached to its armature magnetically and can be measured in pounds by multiplying the square of the number of lines of force per square inch by the area of contact and this product divided by 72,134,000. This is only approximate.

The following table derived by Aylmer and Small shows the ampere turns required to produce lines of force in wrought iron, air and cast iron and also the flux required per square inch to produce a certain traction.

Digitized by Google

WROUGHT IRON				CAST IRON			
Lines per Square Inch	Permeability or Multiplying Power of Iron	Lines in Air	Ampere Turns per Inch in Length	Lines per Square Inch	Permeability or Multiplying Power of Iron	Lines in Air	Ampere Turns per Inch in Length
30,000	3,060	9.8	3.06	25,000	833	30.0	9.4
40,000	2,780	14.4	4.72	30,000	580	51.7	10.2
50,000	2,488	20.1	6.29	35,000	390	89.7	27.5
60,000	2,175	28.0	8.76	40,000	245	163.	51.
65,000	1,980	32.8	10.26	45,000	135	333.	104.
70,000	1,920	40.7	12.7	50,000	110	454.	142.
75,000	1,500	50.0	15.6	60,000	66	909.	284.
80,000	1,260	63.5	19.8	70,000	40	1750.	548.
85,000	1,030	82.5	25.8				
90,000	830	108.0	33.8				
95,000	610	156.	48.8				
100,000	420	238.	74.5				
105,000	280	375.	117.				
110,000	175	629.	197.				
115,000	95	1210.	378.				
120,000	60	2000.	626.				
125,000	40	3125.	978.				
130,000	30	4333.	1356.				
135,000	24	5626.	1761.				
140,000	18	7777.	2434.				

Flux per sq. in. between armature and magnet	Pull in lbs. per sq. in. between armature and magnet	Flux per sq. in between armature and magnet	Pull in lbs. per sq. in. between armature and magnet
5,000	.34	75,000	78.0
10,000	1.4	80,000	88.7
15,000	3.1	85,000	100.
20,000	5.5	90,000	112.
25,000	8.7	95,000	125.
30,000	12.5	100,000	138.
35,000	20.0	105,000	153.
40,000	22.2	110,000	168.
45,000	28.1	115,000	183.
50,000	34.6	120,000	199.
55,000	41.9	125,000	216.
60,000	49.9	130,000	234.
65,000	58.5	135,000	252.
70,000	67.9	140,000	272.

Digitized by Google

CHAPTER III.

Quantitative Consideration of Electricity.

In the preceding chapter the word ampere is used in a number of instances and before going further in the study of electricity it will be necessary for us to be thoroughly familiar with some of the methods of measurements of it. Were we to buy a piece of real estate we would consider it necessary to know the number of acres in the piece. Likewise were we to use electricity for illuminating purposes it would be wise for us to know for what we are paying.

Electro-Motive Force: The Volt.

Water will flow from a point of high pressure to that of low pressure or we can force water up hill by applying sufficient pressure at the lower end of the pipe. Similarly, electricity will flow in a conductor provided there is what we may term a greater electrical pressure at one end or portion of the circuit than at the other end or portion. As long as this difference of pressure is kept constant, there exists something that is similar in many respects to a current producing force. For this reason it is called *Electromotive Force* (E. M. F.), and *is that force which maintains or tends to maintain a current of electricity upon a circuit.*

Difference of potential or electromotive force is measured in volts and may be due as we have seen to friction or chemical action or movement of the armature of a dynamo in a magnetic field. In every case some work or expenditure of energy must take place to produce it. A Standard Gravity Battery has difference of potential between its plates of about 1 volt while one-half inch of spark upon a wireless set using spark electrodes of a diameter of about $\frac{5}{8}$ inch would signify a difference of potential of approximately 30,000 volts.

Strength of Current.

The difference of effects produced by a current of electricity depends largely upon the size of the current producing them. We may carry hundreds of thousands of volts upon a wire no larger than a hair while we can melt a copper wire the size of the graphite in a lead pencil where there is only 100 volts difference of potential.

Digitized by Google

Connect two or three new dry cells together and melt a 10 ampere fuse wire with the current from them. From a powerful induction coil connect two very fine copper wires about No. 40 to a spark gap. It is obvious that there must be some condition existing which makes the two foregoing experiments possible. By employing suitable measuring instruments, we find that the effects produced were different strengths of current. The practical unit of strength of current is the Ampere. This must not be confused with quantity of electricity which is measured in Coulombs. The quantity transferred by a current of one ampere and passing some point on the circuit in one second is termed a Coulomb.

Electrical Resistance.

Every substance offers resistance to the passage of electricity. We have defined those substances which offer a very powerful resistance as insulators, or dielectrics. The unit of resistance is the Ohm and is the resistance of about 10 feet of No. 30 copper wire, also is the resistance of the conductor which permits 1 ampere of current to be transferred when there is a difference of potential of 1 volt. One million Ohms are called a Megohm, and a millionth of an Ohm, a Micro Ohm. The particular resistance of different substances when compared to that of some standard conductor is called the Specific Resistance of the substance. Silver is taken as the standard and our tables below are taken from this standard.

TABLE OF SPECIFIC RESISTANCES OF METALLIC CONDUCTORS.

SUBSTANCE	Resistance in Ohms at O degrees Centigrade of a wire 1 cm. long of one square cm. cross section = K x 10^{-6}	Resistance in Ohms at O degrees Centigrade of a wire one foot long of 1-1000 inch diameter
Silver, annealed	1.460	8.781
Silver, hard drawn	1.585	9.538
Copper, annealed	1.584	9.529
Copper, hard drawn	1.619	9.741
Gold, annealed	2.088	12.560
Gold, hard drawn	2.125	12.780
Aluminum	2.906	17.480
Zinc, pressed	5.613	33.760
Platinum, annealed	9.035	54.350
Iron, annealed	9.693	58.310
Lead, pressed	13.18	79.290
Mercury	94.07	565.900
German silver	20.89	125.700

Digitized by Google

Power.

Power may be defined as the rate of doing work. A may do a certain piece of work in one day, while it may take B two days to accomplish the same. Therefore, A is more powerful than B and is so from the fact that he works at a greater rate than does B.

Electrical power is measured in Watts and is the rate at which work is done when one volt transfers a current of one ampere over a circuit. One Horse Power is necessary to lift 33,000 pounds one foot in one minute. There are 746 watts in an Electrical Horse Power. A Kilowatt (K. W.) is 1,000 watts and is about 1.34 Horse Power.

Abbreviations of Symbols.

In order to save time and space in writing some of the laws governing the flow of currents and in electrical descriptions, the following symbols have been adopted and are used throughout the electrical text books, so should be learned.

Symbol	Meaning.
I,	—Amperes, strength of current.
E,	—Volts, Electro Motive Force.
R,	—Ohms, Resistance to flow.
W,	—Watts, unit of power.
Q,	—Coulombs, Units of quantity.
C,	—Capacity, Unit of capacity is Farad.
L,	—Inductance, Unit of Inductance is the Henry.

Ohms Law.

The relation of Current, Electro Motive Force and Resistance is expressed in a general statement called "Ohm's Law", and is stated, "In an active circuit, when a continuous current is flowing, the magnitude of the current in amperes is equal to the Electro Motive Force in volts divided by the Resistance in Ohms." This law may be turned about and expressed in different ways, thus:

$$I=\frac{E}{R}, \qquad R=\frac{E}{I}, \qquad E=R\times I.$$

We speak of resistance in Ohms and write it "R". However, there is a certain resistance to the electrolyte of a primary cell and this resistance is written "r".

Digitized by Google

Primary and Secondary Batteries.

Batteries are divided into two classes, Primary and Secondary. A Primary battery is one in which one of the plates of the cell is disintegrated by the electrolyte and is not used again for the purpose of generating electricity. An example of the primary battery is a common dry cell which is used to ring our door bells. An example of the secondary cell is an ordinary storage cell used in automobiles to furnish current for lighting purposes. In a lead type of secondary cell, current is used to "charge it," and its action is to change one lead plate to oxide of lead by means of a certain solution, and when at a certain stage, the charging current is withdrawn. When the cell is connected to an outside resistance, its then different plates are acted upon by the electrolyte and produce a current of electricity. The plates then are gradually changed back to their original state of lead, and the cell is said to be discharged.

Mr. W. C. Jenkins in "Popular Electricity", Vol. IV., No. 11, says about storage or secondary batteries that "although it has taken a great many years to develop and perfect the electric storage battery, as it is now on the market, it is a comparatively simple device, presenting few difficulties in maintenance and operation to the owner who will take the pains to study its characteristics.

"At the outset it may be said that the storage battery does not 'store electricity,' but rather chemical energy, which at will may be converted into electrical current.

"All batteries are made up of a number of units called cells, contained in jars of rubber or other acid proof material. In the lead type of cell there are two series of plates called the positive and the negative plates. The positives and the negatives alternate as they hang in the cell, all the positives being connected to one terminal of the cell and all the negatives to the other terminal. The space in and around all the plates is filled with a dilute acid solution called the electrolyte. This solution consists of about one part of sulphuric acid to ten parts of distilled water. The plates themselves are in the form of grids having the greatest amount of area possible. In this state, however, a cell will not deliver a current of electricity. It must be charged.

"Before charging, all the cells are connected together in series; that is, the positive terminal of one being connected to the negative terminal of the next, and so on, leaving a free negative

Digitized by Google

terminal at one end of the complete battery and a free positive terminal at the other. These two terminals are then connected to the terminals of a source of direct current electricity and current passed through the battery.

"The set of plates through which the current enters each cell is called the anode, or positive. The other set is called the cathode, or negative. When the current starts to flow through the cell a very lively chemical action takes place. The anode at once begins to receive a coating of lead peroxide (red lead) while the cathode turns gray and spongy although it still remains metallic lead. As soon as the anode becomes completely covered with the peroxide of lead, which takes quite a long time, the cell is *charged* and must be taken out of the circuit.

"Now we have an altogether different cell from the one with which we started out. Before the cell was charged we did not have a battery in any sense of the word because we did not have two different metals for the plates, which is necessary for a battery. After the charging however, we have one plate of metallic lead and one of peroxide of lead and the charged cell is capable of delivering current in a manner similar to any primary battery. Connect its terminals to the motor circuit and the battery is ready to do work.

"From the moment the cell begins to furnish current, or *discharge,* it begins to run down. Current begins to flow from the gray plates through the electrolyte to the red plates; that is, in a direction opposite to that during charging, and the chemical action is also opposite, undoing the work of the charging process. The oxide of lead changes to sulphate of lead, and the spongy lead on the other plates also to sulphate of lead. The current continues to flow until both sets of plates are changed to sulphate of lead and then it ceases because the plates are then *alike,* as no battery will operate unless the plates are of *different* metals or compounds.

"The discharge being complete the cell must be charged over again before it will give current."

Battery Connections.

If two or more cells are connected in series, that is, positive pole to negative pole, the total internal resistance is equal to the resistance of one cell multiplied by the number of cells, or

$$R=n\times r.$$

If two or more cells are connected in multiple or parallel,

Digitized by Google

that is, the positive pole of one cell to the positive pole of another, and the negative pole of the first to the negative pole of the second and so on, the total internal resistance "R" equals the internal resistance "r" of one cell divided by the number of cells, or

$$R=\frac{r}{n}.$$

The current obtained from a cell when working through an external resistance which is so low as to be negligible is expressed by Ohms law and is equal to the voltage of the cell divided by the internal resistance of the cell.

The total voltage obtained from two or more cells connected in parallel is never more than that of a single cell, provided their voltages are all equal.

The total voltage of two or more cells connected in series is found by multiplying the voltage of one cell by the number of cells.

Where cells are connected in either series or parallel, Ohms law still applies but must be somewhat changed to fit the occasion so that in series it becomes

$$I=\frac{E\times n}{R+(n\times r)}$$

and for cells in parallel

$$I=\frac{E}{R+\frac{r}{n}}.$$

In both cases, "E" is the voltage of one cell, "R" the external resistance through which the cell may be working, "n" the number of cells, and "r" the internal resistance of one cell.

Shunt Circuits.

In some cases, a current of electricity may divide and take two or more paths over which to flow. Such circuits or paths are said to be in parallel or in Shunt, and the resistance of the whole circuit is lowered as a result. The expression to "shunt" an electrical circuit means to provide an additional path over which the electricity may flow. For example, were we to shunt an electric lamp with a coil of resistance wire, we would connect the terminals of the coil directly across the terminals of the lamp.

Digitized by Google

An incandescent lamp has a resistance of say 200 Ohms, and across its terminal we will connect a coil of wire having a resistance of 300 Ohms. The resistance of the coil and lamp taken together is lowered in amount, and is found by dividing the product of the different resistances by their sum, or

$$R = \frac{r_1 \times r_2}{r_1 + r_2}$$

and in the case stated

$$R = \frac{300 \times 200}{300 + 200} = 120.$$

When there are several circuits any two can be taken thus and the result combined in the same way with another circuit and so on until the total resistance of the group of conductors connected in parallel is obtained.

Resistance of Conductors.

A mil is one one-thousandth of an inch. The area of a circle one mil in diameter is known as a circular mil. Copper and other conductors are often described as having so many circular mils. This means the area in circular mils of a cross section of the wire. A wire 5 mils in diameter has an area of 25 circular mils. To roughly calculate the resistance in Ohms of copper wire, multiply the length of the wire in feet by 10.29 and divide this product by the cross section in circulars mils. It must be remembered that the result is only approximately correct.

The following table may be of assistance in calculating the resistance and other properties of copper wire.

Digitized by Google

COPPER WIRE TABLE

Copper Conductor				Single Cotton-covered Wire		Double Cotton-covered Wire		Carrying Capacity of Copper Wire	
Guage B. & S.	Diameter in Mils.	Area in Circular Mils.	Resistance in Ohms per 1,000 ft. at 0° F	Turns Per Linear Inch	Turns per Square Inch	Turns Per Linear Inch	Turns Per Square Inch	Rubber Insulation Amperes	Other Insulation Amperes
0000	960.000	211600.00	.049	1.80	3.60	1.70	3.21	210	312
000	409.600	167800.00	.062	2.08	4.81	2.00	4.44	177	262
00	364.800	133100.00	.078	2.38	6.29	2.32	5.98	150	220
0	324.900	105500.00	.098	2.72	8.22	2.65	7.80	127	185
2	257.600	66370.00	.156	3.48	13.45	3.36	12.54	90	131
4	204.300	41740.00	.249	4 52	22.70	4.28	20.35	65	92
6	162.000	26250.00	.395	5.60	34 84	5.44	32.45	46	65
8	125.500	16510.00	.628	6.94	53.81	6.80	51.38	33	46
10	101.900	10380.00	.999	8.55	81.22	8.51	80.47	24	32
12	80.810	6530.00	1.590	10.80	129.60	10.62	125.30	17	23
14	64.080	4107.00	2.527	13.45	201.00	13.10	190.70	12	16
16	50.820	2583.00	4.018	16.60	306.10	16 35	300.00	6	8
18	40.300	1624.00	6.389	18.20	448.00	19.90	440.00	3	5
20	31 960	1022.00	10.160	25.30	763.00	23.91	634.80	1	2
22	25.350	642.00	16.170	31.00	1065.00	28.58	907.00		
24	20.100	404.00	25.690	37.70	1579.00	33.60	1254 00		
26	15.940	254.10	40.850	45.30	2280.00	39.90	1770.00		
28	12.640	156.80	64.940	54.00	3240.00	45.50	2300.00		
30	10.030	100.50	103.200	64.40	4608.00	51.10	2901.00		
32	7.950	63 21	164.200	75.00	6250.00	60.20	4027.00		
34	6.305	39.75	261.100	87.60	8527.00	68.60	5230.00		
36	5.000	25.00	415.200	101.00	11330.00	78.50	6847.00		
38	3.965	15.72	660.000	115.00	13580.00	89.10	8821.00		
40	3.145	9.89	1050.000	130.00	18780.00	102.50	11650.00		

Digitized by Google

CHAPTER IV.

Dynamo Electric Machinery.

Several times in the preceding chapters we have spoken of the futility of attempting the generation of an electric current of moment by means of chemical action, friction and heat. We will now consider the generation of electricity by Dynamo Electric Machinery.

It has been stated that when a magnetic field is created around a conductor which forms a closed circuit, there is a current on that conductor. Thrust a bar magnet held in the hand suddenly into the center of a coil of wire whose terminals are connected to the binding posts of a sensitive galvanometer. As the magnet is lowered quickly into the coil the needle of the galvanometer is seen to make a sudden movement, thus detecting the presence of a current of electricity and we will also notice that after a few seconds the needle returns to its original position, showing that the flow of current has ceased. Now suddenly bring the magnet out of the coil of wire. Again a deflection of the galvanometer needle is noticed, but this time it is in the opposite direction to that produced when we inserted the magnet in the coil. We have seen how around a magnet there exists what we have termed Magnetic Lines. Had we used in this experiment an unmagnetized bar of iron, no deflection of the needle would have been seen. We may therefore conclude that the cause of the flow of current must be attributed to the magnetism. However, while the magnet was at rest in the coil, the needle returned to its normal position, showing no current, but as soon as the magnet was moved, a current was generated. Hence, it is evident that the mere presence of the magnetism of the bar was not in itself the cause of the flow of current. Rather as lines of force exist around every magnet, and as when the magnet is moved they would move with it, were a conductor to be placed in such a position that these lines of force would be obliged to pass through or "cut" the conductor, there would be a difference of potential produced upon it. If the conductor forms a closed electrical circuit, the difference of potential would make a flow of electricity. In the above case, the closed cir-

Digitized by Google

cuit was one composed of the coil of wire and the galvanometer. The lines of force around the magnet held in the hand passed through the many turns of wire or conductor wound on the spool and the result of the action of "cutting" was a current of electricity as manifested by the throw of the galvanometer needle. The direction of flow of this current will depend upon the direction of movement of the lines of force, as is seen by the opposed throw of the galvanometer needle when the magnet is inserted or withdrawn.

It is obvious then, that in the foregoing experiment we have at hand all the rudimentary apparatus and conditions necessary by which a current of electricity may be generated by mechanical means. It is immaterial whether we move the coil through the lines of force or whether the lines of force be moved through the coil. Either case develops an E. M. F. By increasing the strength of the magnet or increasing the number of turns of wire in the coil, a greater E. M. F. will result. When one hundred million lines of force are cut by a conductor in one second, one volt E. M. F. is produced.

In a dynamo electric machine, commonly termed a dynamo, the magnet is really an electro magnet and is called a field magnet, which term includes in its meaning the iron in the core, the winding of wire, and what are called the pole pieces.

At this point it will be interesting to ascertain exactly which direction the current tends to flow under certain conditions. If we have a current flowing from south to north on a conductor under which is placed a compass, it will be noticed that the south end of the compass needle turns toward the west. This is called the Snow rule and derives its name from the first letters of the important words of the rule.

To determine the direction of the lines of force set up around a conductor; if the current in the conductor is flowing away from the observer, the direction of the lines of force will be clockwise around the conductor.

To determine the direction which a conductor will tend to move if in a magnetic field and carrying a current; place the thumb, forefinger and middle finger of the left hand at right angles to each other, as in Fig. 1. When the forefinger shows the direction of the lines of force and the middle finger the direction of the current upon the conductor, the thumb will show the direction of the motion given to the conductor.

Digitized by Google

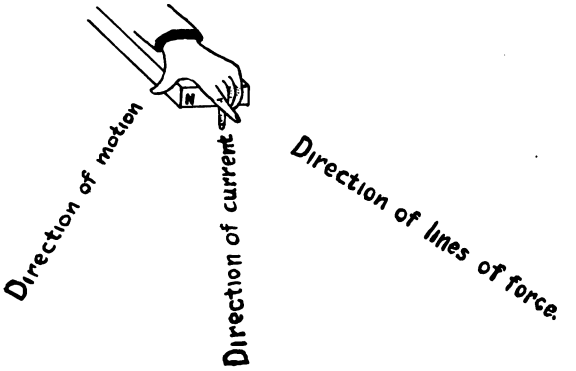

Fig. 1.

The direction of an induced current on a conductor which moves in a magnetic field may be determined as follows: place the thumb, forefinger and middle finger of the *right* hand at right angles to each other as in Fig. 2. When the forefinger points in the direction of the lines of force, and the thumb in the direction of the motion of the conductor, the middle finger will show the direction of the flow of the induced current.

A rule which may be useful in armature work is given: When the effect of the motion of one coil of the armature in rotating is to lessen the number of lines of force passing through it from pole piece to pole piece, and an observer is looking along the direction of the lines of force, the current flowing in the conductor

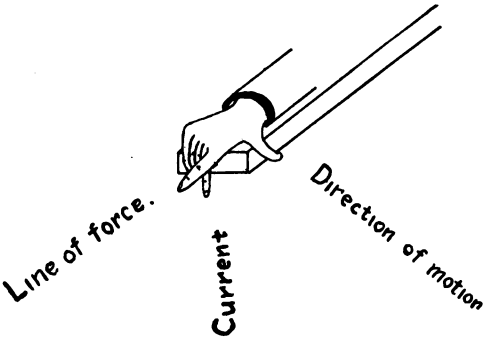

Fig. 2.

will be in a clockwise direction; however, if the effect of the rotation of the armature is to increase the number of lines of force that pass through the coil, the flow of current takes an opposite direction.

Digitized by Google

Fig. 3 shows a very simple form of dynamo. The letters S and N designate the field magnets. The coil of wire A is rotated within a field of a magnet so as to cut the lines of force. This rotating part is called the *Armature*. The field magnets are excited by means of some outside generator or battery, or may be permanent magnets. Now, when the current passes through the field coil, lines of magnetic force go across and partially fill the space between the pole pieces of the magnet, and as the coil of wire, termed the armature, is rotated upon its axis, it is evident that this coil will cut the lines of force as it rotates. In this case, the

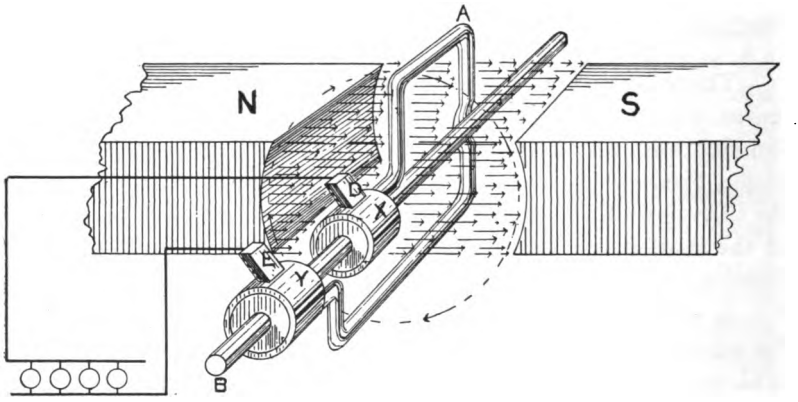

Fig. 3.

term "cutting" means to pass through. There is a time, however, when in the revolution of the armature its coil cuts very few of the lines. This occurs when it comes to a vertical position and for a short space in its circular movement really moves parallel to the lines or nearly so. This condition exists in Fig. 3, where the coil A is perpendicular to the lines of force.

Some means must be provided to collect the current from this armature and this is accomplished by bringing one end of the armature coil in contact with a ring, X, insulated from the rotating axis marked B and the other end to a similar ring marked Y and insulated from B. These rings are termed *Slip* or *Collector* rings. Copper or carbon brushes, D and E touch the rings and carry away the current. The more intense the lines of force, the greater will be the strength of the electrical force developed.

The current produced by the electrical force, or as it is more commonly called, the E. M. F., flows in two directions in one complete revolution of the armature coil, that is to say, the lines

Digitized by Google

of force are cut in opposite directions in each half of the revolution. Hence a reversal of the current will be produced. This type of machine is called an *Alternating Current Dynamo.*

The essential things necessary to produce a current of electricity then are to have the means of rotating a conductor in the field of two powerful electro-magnets. As the coil passes through the field the current is produced, flowing in one direction during one-half revolution of the armature coil, then upon the next half revolution a current is produced flowing in the opposite direction, and this is called an Alternating Current. The number of times the current reverses in direction in a second is termed the *Frequency* of the current and is spoken of as *Cycles,* which means two complete reversals or alternations. A 60 cycle current would mean that there were 120 alternations or reversals per second. To produce a current of 60 cycles frequency the coil in Fig. 3 would have to rotate 60×60 or 3,600 times per minute.

The Commutator.

There are some conditions under which it is necessary to employ current flowing in the same direction. It is apparent that the current generated by a dynamo such as has just been described, that is, alternating current, would not be suitable for such purposes. Reference is made to Fig. 4. We have here an

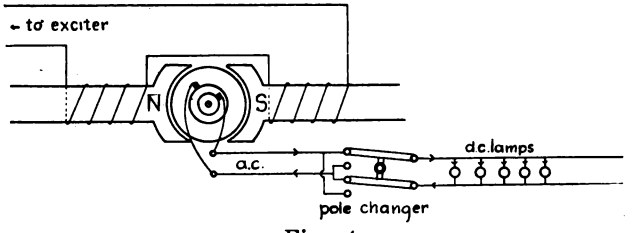

Fig. 4.

alternating current dynamo (A. C. dynamo) connected electrically to a pole changing switch. To the latter appliance are connected incandescent lamps through which it is desired to send a continuous current, (direct current). The dynamo here is delivering current to the pole changer alternating in direction of flow. We will start with the first alternation. By means of arrows the complete circuit can be traced through the lamps and returning to the dynamo. As the armature rotates through a half revolution, the current is flowing in the direction indicated by the arrows and would, if not changed during the next half revolution of the

Digitized by Google

armature, flow in an opposite direction upon the circuit. But at the instant when there is no flow of current, as has been shown occurs when the armature conductors move parallel to the lines of force, we reverse the pole changer, which action, as may be noticed from the wiring of the latter instrument, sends the current through the lamps in the same direction as that produced by the first half revolution of the armature. As the E. M. F. is governed by the number of lines of force cut by the armature, and as there is a time when very few, if any, of the lines of force are cut, this rotating movement of the armature produces a current flowing in one direction only *through the pole changer and lamps,* which varies in value from zero to maximum and back to zero. Obviously, the faster the armature is rotated and the pole changer moved in accordance, the less flicker would be noticed in the lamps, and the more E. M. F. developed. We might be able to develop a small E. M. F. and keep the speed of the armature within reasonable limits were other coils in the armature provided. But a pole changer of this construction and for this purpose would be a clumsy contrivance at best. To accomplish the same purpose in a more practical way we employ what is termed a *Commutator.*

For a single coil armature this appears to consist of a brass

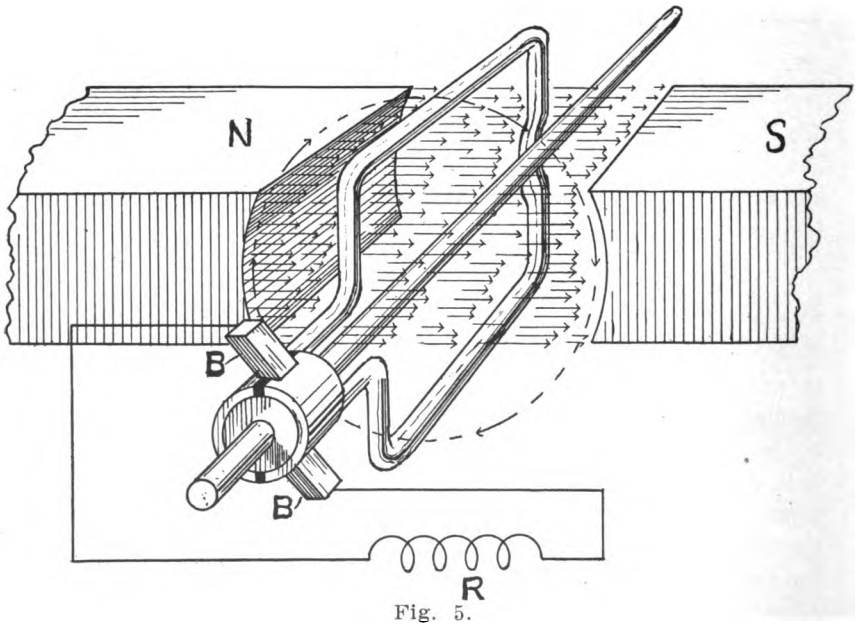

Fig. 5.

Digitized by Google

ring attached to the axis of the armature and insulated from it. This brass ring is seen upon close inspection to be divided into two parts by splitting it lengthwise upon two opposite sides. Each half is connected to one of the terminals of the armature coil. In Fig. 5 when the plane of the armature coil is perpendicular to the lines of force passing between the pole pieces S and N no lines of force are cut, no E. M. F. is developed and no current will flow through the coil R. But as it begins its movement in the direction of the curved arrows, lines of force *will* be cut, a current will flow around the armature loop, will be collected by the brushes B and flow through the coil R. During the next half revolution the lines of force will be cut by the armature coil in an opposite direction and there will be a reversal of the current. But at this instant the opposite segment of the commutator will be in connection with the brush from which the current flowed during the first half revolution of the armature, thus compelling the current to flow to the coil R *always in the same direction.* That is, although the current upon the armature coil itself always reverses in direction at each half revolution, by arranging the connections of the coils so that they will be reversed at the same instant the

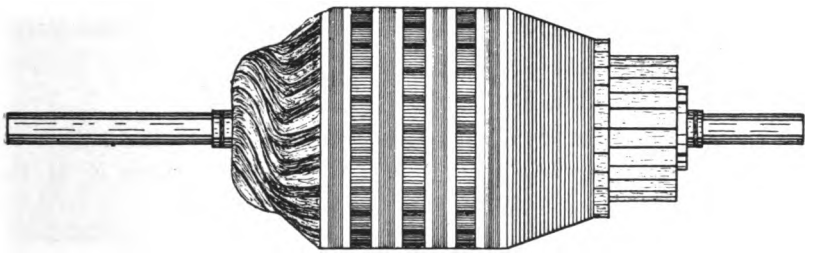

Fig. 6.

current in the coil reverses, a change in direction of current through the coil R is prevented. Such a current flowing in the same direction is termed a *direct current,* and the type of generator of electricity producing it is termed a *Direct Current Dynamo.*

We may have two or any number of coils in the armature distinct from the others, and each coil terminating in two segments of the commutator, which are upon opposite sides of the axis. The coils are generally connected together so that one segment of the commutator is the ending of one coil and the beginning of the next.

Any dynamo upon which we see collector rings we may conclude is an alternating current machine and whenever a commutator, direct current. It must not be forgotten that all dynamos

Digitized by Google

are alternating current generators primarily, and that the commutator is merely an appliance for rectifying the alternating current or changing it to a direct current. Fig. 6 shows an arma-

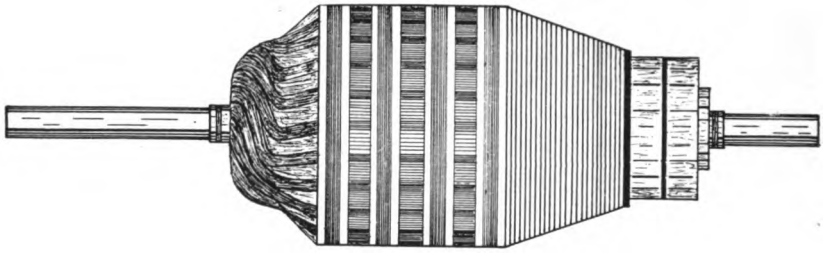

Fig. 7.

ture consisting of several coils and fitted with an attached commutator for obtaining direct current, while Fig. 7 shows the same armature but fitted with the collector rings for obtaining alternating current.

The E. M. F. of a dynamo can be calculated from the following formula:

$$E = \frac{\phi \times N \times S}{10^8}$$

where E equals E. M. F. in volts,

S equals the revolutions of coil per second,

N equals number of loops in the coil,

ϕ equals total number of lines of force cut by the coil.

This applies to two pole machines; if four poles multiply E. M. F. obtained for two poles by 2, and so on for more poles.

Armatures.

Armatures are divided into several classes with respect to

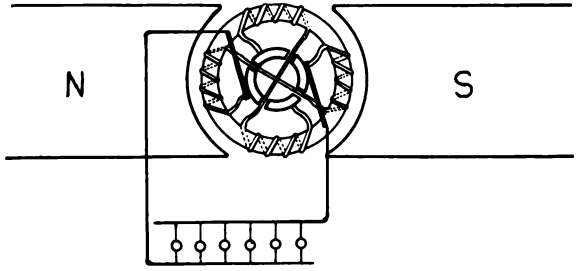

Fig. 8.

the manner in which the windings are arranged upon the iron core. The *ring* type and the *drum* type describe arrangements of

Digitized by Google

the coil on the core while the *open* coil and the *closed* coil type describe the connection on the coil to the commutator. Fig. 8 shows the plan of a ring wound open coil type of armature. It is termed "ring wound" because the coils are wound about the rim of a ring shaped iron core. It is an "open coil" because the windings do not form a closed circuit. Each coil of the armature

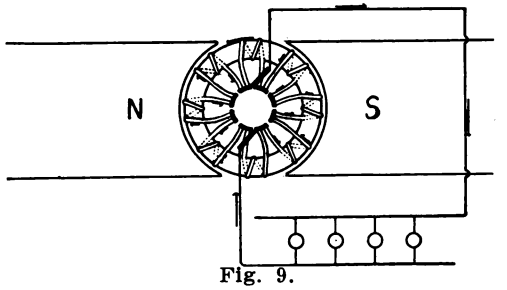

Fig. 9.

is in circuit only at a time when the bars of the commutator to which its terminals are connected are in actual contact with the brushes. All the rest of the time the coils whose terminals are in contact with the brushes by means of the commutator segments are in open circuit. On the other hand, in a closed coil wound armature as is seen in Fig. 9 all the coils are always in circuit. Ring wound armatures are not used to any great extent. One coil of a drum wound open coil armature, which could be used

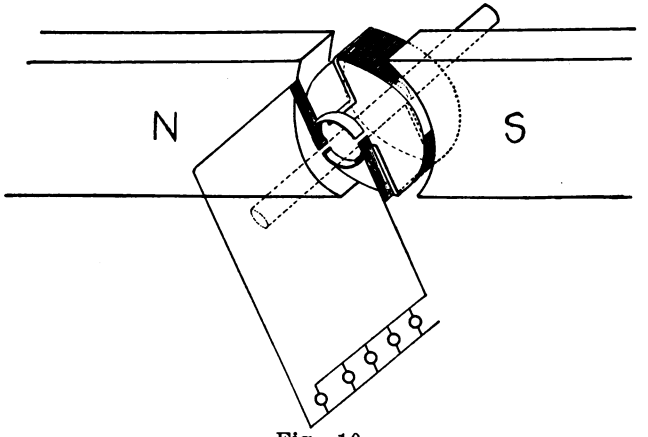

Fig. 10.

with a bi-polar machine, is shown in Fig. 10. This type of armature is most used in direct current machines. Armatures most generally consist of a number of coils in order to obtain more power from the same machine operated at a low speed.

Digitized by Google

Classes of Dynamos.

Dynamos are spoken of as different types of machine according to the manner in which their field magnets are excited. A *Magneto Electric Machine* is a dynamo whose field magnets are permanent steel ones. Since a steel magnet cannot be made as powerful as an electro-magnet having a soft iron core of like dimensions, this type of dynamo is not generally used except in small work such as telephone generators, etc.

A Separately Excited Dynamo is one whose field magnet coils get their current from a separate generator or battery, and not from its armature coils. The last statement may seem confusing in as much as it would seem that we obtain the current to produce magnetism in our field magnets from the armature direct. However, investigation will prove that the iron core of the field magnet never really loses its entire magnetism, but possesses what has been spoken of before, residual magnetism. Although slight as it may be, if there be any magnetism in the field magnets, there must be some lines of force passing through the armature, and if the field coils be connected to the terminals of the armature (and this means the brushes) when the armature is revolved, these lines of force will be cut by a moving conductor (the armature coils) and a small E. M. F. produced which will make a slight flow of current in the armature, if properly connected. This current will then flow through the field magnets establishing more lines of force, thus assisting the residual magnetism, there will be additional lines of force cut by the coil of the armature and additional current produced in the coils which again will flow through the field coils producing still more lines of force and so on until the field magnets obtain their maximum strength under no load, i. e., supplying no current to external circuits, lamps and the like.

Connecting the parts of a dynamo in a manner as described above makes what we term a *Shunt Wound Dynamo,* and as is seen, although we obtain the working current from the brushes of the dynamo, a certain amount of this current was shunted off into the field coils and from this division of the current, by shunting, the shunt wound dynamo derives its name.

Often times in shipping a dynamo the jar will cause the residual magnetism to leave its field magnets and it is sometimes necessary to use a battery to produce the starting magnetism for the machine. This is termed "building up the fields."

Digitized by Google

A Series Wound Dynamo consists of the usual field coils and armature, excepting that the coils of the armature and the field magnets are connected in series, so that the current is obliged to pass through one of the coils before going through the other. Whether it be the field coils first or the armature first will depend upon the way the machine is running and upon the manner of winding the field coils.

The field magnets often possess both series coils and shunt coils. This combination is for purposes of regulation where it is desired to keep as near a constant E. M. F. as possible if the machine be a dynamo, or to maintain as nearly a constant speed as possible if the machine is a motor. The series winding can always be told from the shunt winding because the series winding must carry nearly the entire current of the machine and it would necessarily be constructed of much heavier wire than the shunt winding. A machine possessing both series and shunt windings is termed a *Compound Wound* Machine.

Electric Motors.

If a current of electricity be generated by some means, and conveyed to the brushes of a direct current dynamo, it will enter the armature coils through the brushes and commutator segments and be the means of converting the iron core of the armature into an electro-magnet. Direct current motors have their field coils connected to the armature coils so that as soon as the armature is excited, the field magnetism is built up and temporary lines of force will be established between the field pieces which will always have the same direction of force or flow if the current exciting the field magnets is of a continuous nature. That is, one field magnet will be a North pole, while the other is a South pole. In electric motors, we directly apply the principle that "like poles repel, while unlike poles attract." Supposing that a current is flowing in the armature coils exciting its iron core and converting it into an electro-magnet. Now this electro-magnet will possess the same characteristics found in all others,—a North and South pole. At the same time and by means of the same current the field pieces of the motor are excited, producing another North and South pole. By suitable connections, these magnetic poles are placed so that a North pole of the armature will be attracted by a South pole of the field magnet upon one side of the armature, and upon the other side, a South pole of the armature is attracted by the North pole of

Digitized by Google

the field magnet. A question might arise here as to why the apparatus works so conveniently in this manner, but it must be remembered that if one field magnet is a North pole, the opposite field magnet must be a South pole, and this applies to the armature as well as the field magnets. Thus we would have a strain existing between the unlike poles of the armature and the field magnet tending to move them toward each other. But this action of moving together can be accomplished only in a rotary manner, as the armature is fastened to the axis which is in stationary bearings, and the field poles are stationary, so that the final effect of the attraction between the poles is to cause the axis to rotate. Were it not for the commutator, this rotary motion would only take the armature to a position where the positive pole of the armature would be as near as possible to the negative pole of the field pieces, as the attraction at that position would be greatest on account of the nearness of the dissimilar magnetic poles present in the armature and field pieces and would tend to bring the armature to rest. But as soon as the armature has rotated a short distance, a new commutator segment comes under the brushes with its attached armature coil, and new poles are established in the armature which occupy the same relative position as the former ones occupied. Thus a new impetus is given the armature and as it continues to turn, new poles are constantly coming up to be attracted by the field magnets which causes the turning to be continuous as long as current is supplied to the machine.

Motor Generator Sets.

Most of the boats upon which wireless equipment is installed do not have alternating current service. Direct current is at present found more convenient for the use to which electricity is put on steamboats. As we will see later why alternating currents are more suitable for wireless transmission than direct currents, it is necessary for some kind of apparatus to be used from which alternating current can be obtained. This convenience is incorporated in what is termed a Motor Generator set, a cut of which is shown in Fig. 11. It consists of an alternating current generator of the type desired to use, mounted on the same base with a direct current motor, and the armatures of both machines are upon the same shaft. It is found in practice, that the size of the motor should be at least 50% larger than the rated output of the generator and should be of such design as to permit of rather wide

Digitized by Google

speed variations. Also, to take care of the full load which is thrown on and off several times per second in some cases, the motor should be compounded.

Although there are many different designs of motor generator sets in use for wireless work, the most efficient are those which are

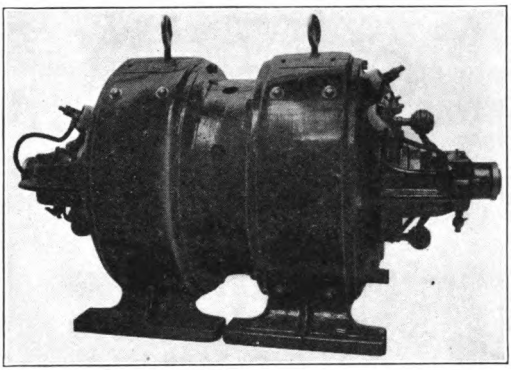

Fig. 11.

as dust proof as possible, yet can be easily installed or their parts readily reached in case of accident. Good oiling is also essential and it should run as easily and noiselessly as any well designed machine ought.

Regulation of Generators and Motors.

We have seen how in the case of an electro-magnet, the strength of its magnetic field may be varied by weakening or strengthening the current in its coil. Obviously, this could be accomplished by varying a resistance in the same circuit with the coils. So it is with the field of a direct current dynamo or motor. The field magnet is merely an electro magnet and it would not be convenient to vary the amount of wire in the field coils so we make use of a variable resistance whose terminals are connected in circuit with the field windings. Such a variable resistance is called a *Field Rheostat.* By using the rheostat we may, within limits, regulate the speed of a motor and also use this appliance to regulate the output of the generator. Fig. 12 shows a Field Rheostat.

Consider a bullet which has been shot into the air. It will rise until the force of gravity overcomes its inertia, brings it to a stop and causes it to start descending toward the earth. It is a well known fact that the rate of descent increases with the time it falls.

Digitized by Google

Thus the force is constantly acting upon the bullet, pulling it toward the earth. In an electric motor, he have a force (magnetism), acting upon the armature, causing it to rotate. But

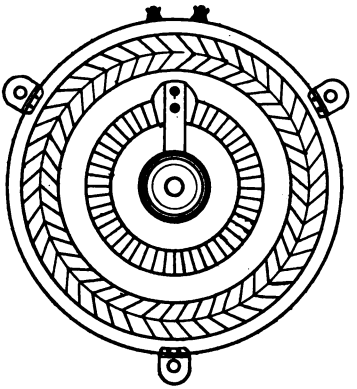

Fig. 12.

without considering the resistance which the armature encounters in turning in the air and the friction of the shaft upon the bearings, this constant force would tend to produce an infinite speed of the armature were it not for one thing. If the load were suddenly thrown off such a motor, serious results would follow from the speed which the armature would attain. However, we have learned that when a conductor cuts lines of force it produces a flow of current in it. So that as the armature of the motor rotates, lines of force are cut and an E. M. F. is produced which is *in direct opposition to that of the source of the motor supply, i. e., the line. This E. M. F. is termed COUNTER E. M. F.* and the speed of the motor is directly dependent upon the counter E. M. F. generated. Within limits, the weaker the field, the less counter E. M. F. would be produced and the greater the speed. Hence, the speed of a direct current motor may be increased by weakening its field. This is the purpose of the Rheostat. Directly opposite of this is its action upon the D. C. dynamo whose output in current is largely dependent upon the strength of its field.

Starting Box.

The resistance of the armature coils of a direct current motor is very low and if the line voltage were thrown directly upon it, the result would be disastrous, as the strength of the current while the motor is at rest would be directly dependent upon the resistance of the armature coils and the impressed E. M. F., according to

Digitized by Google

Ohm's Law. As the speed increases the production of the counter E. M. F. would choke back the line E. M. F. and thus overcome the serious effects which would be at first encountered. If the armature resistance were, say 2 Ohms, and the E. M. F. 110 volts, the strength of current which would be produced in its armature coils at rest would be 55 amperes. Now, the coils might not be wound with wire capable of carrying this current, consequently heating would occur and perhaps a burn out of the armature. This is not an uncommon occurrence when the line voltage is thrown directly upon the motor. To prevent such an accident, *Motor Starting Boxes or Rheostats* are used which consist of adjustable resistances capable of carrying the starting current for the time

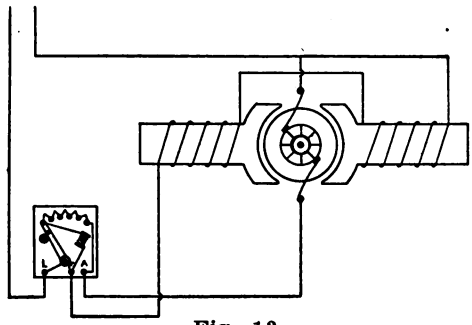

Fig. 13.

required to bring the motor up to speed. The resistance is arranged so as to decrease step by step as the counter E. M. F., which is produced by greater armature speed, increases. Fig. 13

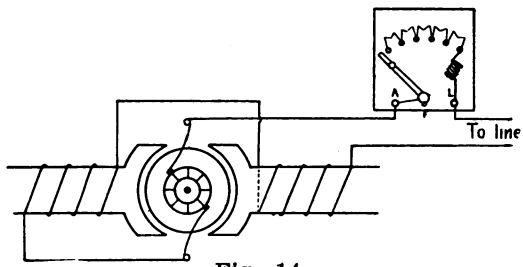

Fig. 14.

shows the general plan of connections from a 3 point starting box for a shunt motor; Fig. 14, for a series wound motor, and Fig. 15 for a compound wound motor. Fig. 16 is a cut of a standard 1 H. P. Cutler-Hammer Starting Box. As the arm in Fig. 13 moves onto the first point of contact, current flows into the resistance coils, the release magnet and the motor fields, also into the

Digitized by Google

armature through the resistance coils. The field coils therefore attain their full strength while the armature current is limited by

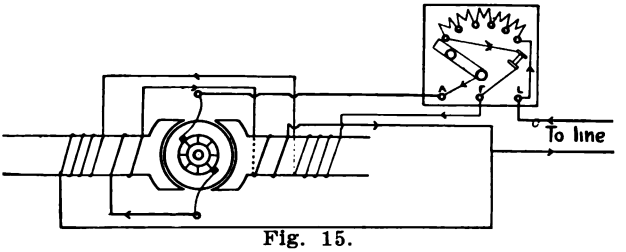

Fig. 15.

the amount of resistance cut in by the moveable arm. As this arm is moved toward the right, the resistance in series with the armature is gradually decreased and at the last right hand point, the resistance is all cut out, and the motor is running at full speed. Care should be taken to not start a motor too fast, as this is not consistent with the purpose of the starting box. Five seconds is probably the average minimum time in which to get a motor up to speed.

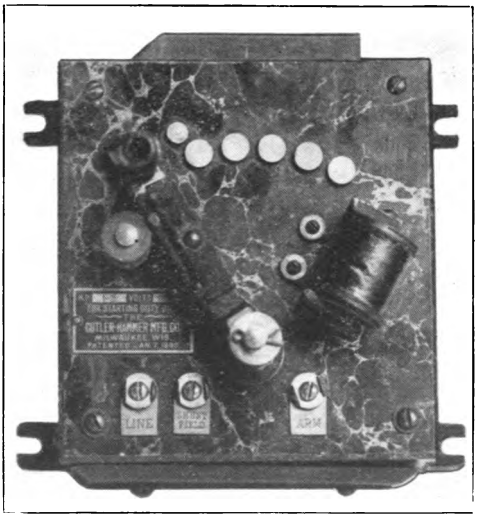

Fig. 16.

At the last point of contact on the starting box, the arm is held by the release magnet. Should the power accidentally go off, the attraction of the magnet for the arm ceases, and a spring causes it to fly back to a no-contact position at the extreme left. This spring should always be kept in good working order. On

Digitized by Google

the front of the starting box are three points of connection marked "Line," "Field," and "Arm", which refers to the proper place for the leads from them to be taken as seen in Fig. 13. In a 4-

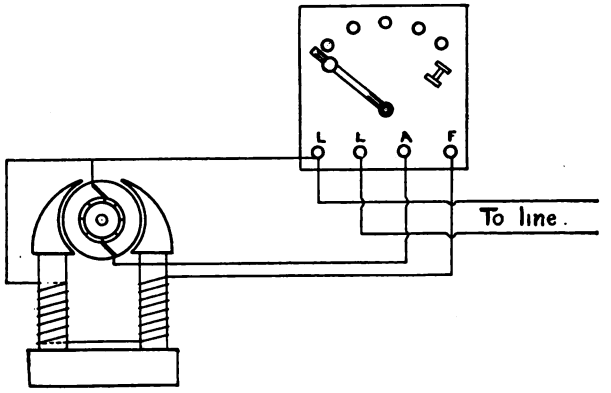

Fig. 17.

point starting box, the line leads are taken directly to the box as is seen in the shunt wound motor connections in Fig. 17. For a compound motor used with the same box see Fig. 18.

A Field Rheostat is generally used in connection with an A. C. generator for wireless use to obtain some flexibility of adjustment.

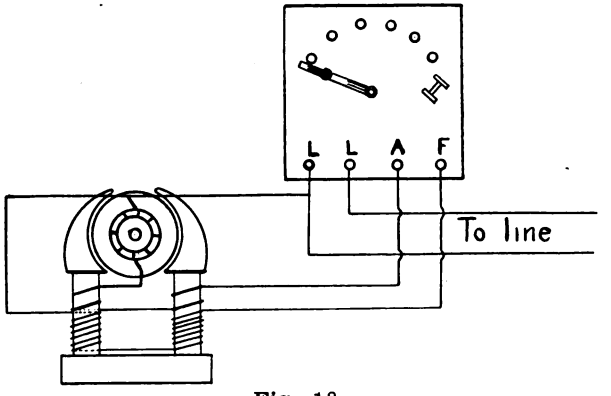

Fig. 18.

If we wish a higher E. M. F. from an A. C. generator, we would increase the strength of the field magnet by cutting out resistance in the rheostat which is in series with the field windings, thus producing more lines of force for the armature coils to cut in their rotation.

Digitized by Google

Faults of the Direct Current Motor.

One of the most common faults of the D. C. motors is sparking at the brushes. This may result from improper adjustment or placing of the brushes. If not in proper position upon the commutator, the armature coil may have a heavy current flowing upon it and at the break of circuit upon the commutator used to rectify the current, a spark occurs as would be expected from the break of any heavily loaded circuit. Also the commutator often gets dirty from the friction of the brushes on the commutator, dust accumulates and the segments should occasionally be cleaned with gasoline. Pitting of the commutator occurs, resulting from incessant sparking and the only remedy is turning down the bars in a lathe. If necessary to smooth up the bars, use fine sand-paper, (never emery paper or emery cloth) and clean with gasoline afterward.

The enumeration of all of the faults of the D. C. motors would require more space than can be given to any one subject in this text-book. However, another of the faults of motor generator sets used for wireless purposes exclusively is the leakage caused by static, or induced currents of high E. M. F. from the aerial. This pits commutators, grounds field coils, and eats out bearings, and should be gotten rid of by means described later. The author has seen bearings heat which have not been oiled for a number of months and cause considerable amount of trouble simply on account of the lack of attention on the part of the operator. This applies particularly to boat stations where often the generator set is not conveniently located for oiling. The action of the static spoken of above is sometimes misunderstood, and it might be well to state that the static or induced currents probably would do very little harm in themselves but they are the means of breaking down the resistance of the air spaces of a motor which assists in the insulation and cooling and the low voltage current readily follows through the path made in this manner, resulting in excess currents and consequent burnouts of the particular part of the machine affected. Renew the brushes when worn short, keep the commutator clean and oiled occasionally, but sparingly, the brushes properly set so that no sparking takes place, the bearings oiled, and all connections tight and ship-shape, and a minimum amount of trouble will be experienced.

Digitized by Google

CHAPTER V.

Electro-Magnetic Induction.

When a current flows through a conductor, a condition of strain exists in the ether around the conductor, which we term a *magnetic field.* As long as the value of the current remains constant the magnetic field does not change; that is, the magnetic field remains stationary with a steady flow of current. We have seen how electricity may be reproduced from this magnetic field with small loss by causing the lines of magnetic force to be cut by a closed conductor. It does not matter whether the lines of force move through the conductor or the conductor through the lines of force. The result is a flow of current in both cases, if the

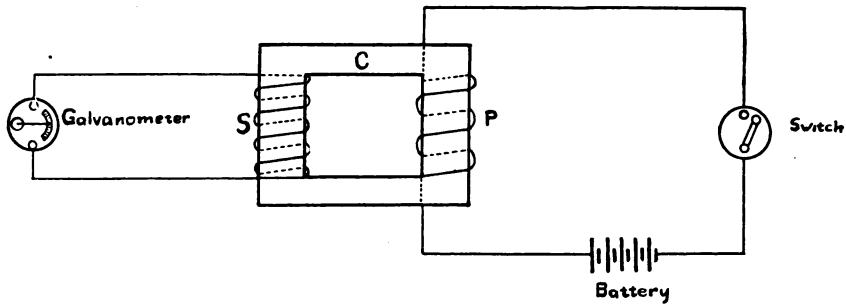

Fig. 1.

conductor be continuous. Fig. 1 shows apparatus necessary to produce current by electro-magnetic induction. Here one of the coils P, which we will call the primary, is connected to a battery B, and upon the core C, over which the primary coil is wound, is placed another coil S, which we will call the secondary. When current from the battery B is allowed to flow through the primary coil P, electricity is generated by induction upon the secondary coil. It registers itself upon the galvanometer by a single throw of the needle, which soon returns to its normal position, showing that the current in the secondary is not of a continuous nature. However, a galvanometer placed in the primary circuit would readily show the presence of a constant electric current through the primary coil, and a compass placed near would readily detect a

Digitized by Google

stationary magnetic field about the core. Upon breaking the primary circuit, another throw of the galvanometer needle is produced and in *opposite* direction to the first throw. By closely comparing the results we may conclude from this experiment that the *changing* magnetic field was the cause of the flow of current in the secondary and that this current was alternating, which was proven by the galvanometer whose needle swung in opposite directions, showing a flow of current first in one direction, then in the other. That a current produces this effect upon the galvanometer needle can be easily proven by connecting an ordinary dry cell to the galvanometer terminals, noting the direction of throw of the north end of the needle, then reversing the connections of the cell and noting the opposite throw of the needle. The changing currents in the secondary winding in Fig. 1 are said to be *induced* by the changing flux (total number of lines of force about the core), which was produced by changing the value of the primary current, and the whole action is called Electro-Magnetic Induction. Were an alternating current employed in the primary instead of the battery current, the galvanometer would show the presence of an alternating current upon the secondary as before. The E. M. F. produced in the latter manner upon the secondary depends upon the amount of current flowing upon the primary, its rate of change (frequency) and the relation of the number of turns of wire upon the primary to the number of turns upon the secondary.

Mutual Induction.

When a varying current flows upon a circuit and generates a current upon a second circuit, the circuits are said to be *mutually inductive.* The circuits are also said to be *coupled* together, and if a large E. M. F. is produced upon the second circuit by the first, the circuits are *close* or *tightly coupled;* if the E. M. F. is of small value the circuits are *loosely coupled.* It is of course understood that the shape of the circuits themselves and their resistance must not change, when a comparison of this kind is made.

Mutual Induction is at a maximum when the lines of force created by one circuit all pass through or cut the conductors of the second circuit. The coupling in this case is the closest possible, and when two circuits have this degree of coupling and possess the same self-induction, L, their Mutual Induction, M, is equal to the self-induction of either. When the value of the self-induction of one circuit is more or less than the other, the Mutual Induction,

Digitized by Google

M, is equal to $\sqrt{L_1 L_2}$ where L_1 is the self-induction of one circuit and L_2 the other.

Mutual Induction may be varied by varying the electrical length of either or both circuits, by varying the coupling, i. e., decreasing or increasing the distance between the circuits, or by making the material surrounding or enclosed by the circuits more magnetizable.

Apparatus is employed in the practice of wireless telegraphy consisting of coils of wire more or less mutually inductive. In order to define the position of these coils with respect to their action upon each other, we employ the term *coefficient* of *coupling*. This is the ratio of the Mutual Induction $\sqrt{L_1 L_2}$ for the position the coils occupy to the maximum value of the Mutual Induction of the *two* circuits, the maximum value occurring when all of the magnetic lines produced by the current upon one circuit cut the other. The coefficient of coupling then equals

$$\frac{M}{\sqrt{L_1 L_2}}.$$

The Induction Coil.

One of the appliances of wireless telegraphy used by early experimenters and employed at present by many students which illustrates the application of electro-magnetic induction is termed a Ruhmkorff Coil or more commonly, a Spark Coil. In amateur sets, spark coils are often made use of for obtaining the high potential currents necessary for transmission. Fig. 2 shows a graphical representation of the coils as generally used for this purpose. When current from the battery B flows through the primary winding P, the core which is composed of a quantity of soft iron wire becomes magnetized and draws the hammer H away from the fixed set screw D. This action, however, breaks the primary circuit, and the spring attached to the hammer causes it to quickly move back again and make contact with the set screw D. At every break of the primary circuit, loops of magnetic flux which have been expanded from the core, contract and cut the secondary winding S which is composed of a great number of turns of fine wire, thus producing an E. M. F. in the secondary winding. If there be enough turns in S and an E. M. F. great enough, sparks will jump across the air gap G. The addition of the condenser C around the circuit breaker prevents sparking between the set screw

Digitized by Google

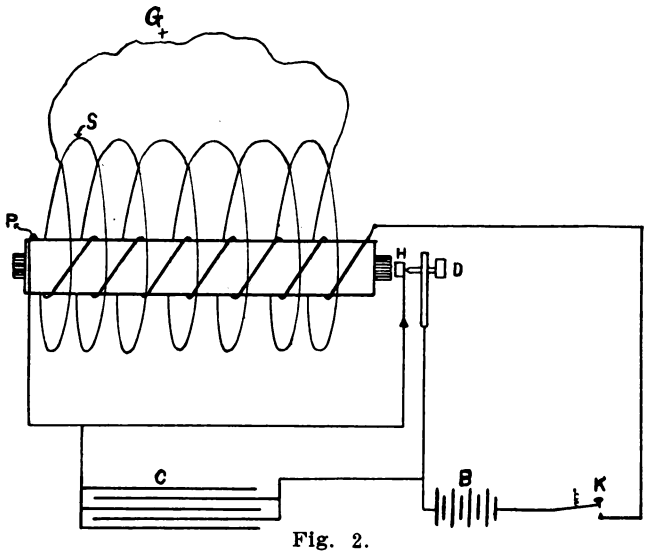

Fig. 2.

and hammer, thus causing the interruption of the current in the primary circuit to be more abrupt, and so increases the E. M. F. of the secondary.

Interrupters for Induction Coils.

Circuit breakers for induction coils, or as they are commonly called, interrupters, may be divided into several classes.

1. Hammer Interrupters.
2. Motor Interrupters.
3. Turbine Interrupters.
4. Electrolytic Interrupters.

An arrangement of a Hammer interrupter was described in connection with the induction coil. A ten inch spark coil takes about 12 amperes at 20 volts when in operation. This is a comparatively heavy current, and although platinum contacts are probably the best that can be obtained for the purpose, they are soon worn out as they burn away by the heavy currents and the hammer break requires constant attention in order that the coil will give fair results. By regulation of the set screw and the stiffness of the spring, the number of breaks per second can be regulated so that there may be from ten to seventy. For long distance wireless transmission, heavier currents than the hammer break will stand are necessary. One of the means employed to break heavier currents is to use some form of interrupter in which

Digitized by Google

mercury, being a fair conductor, forms one of the contact surfaces. Some companies still use induction coils and employ a plunger as one contact, which is made to rapidly dip in and out of a cup of mercury which forms the other contact, thus making and breaking the circuit. As mercury is a liquid, this form of interrupter does not find wide application.

Motor Interrupters make use of some kind of a continuous rotating motor which is employed to make and break the circuit by means of a star pointed disc as one contact and a trough of mercury as the other.

The Turbine Interrupter employs mercury under pressure which is thrown against a metal plate and the continuity of the jet is broken by means of a toothed wheel constructed of some insulating material and rotated by an electric motor. This form of break will stand voltage up to 250, but the fault of this interrupter is that the mercury must be frequently cleaned, if the interrupter is extensively used.

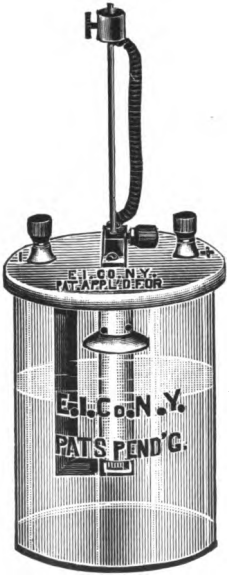

Fig. 3.

A form of *Electrolytic Interrupter* is shown in Fig. 3, which is manufactured by the Electro Importing Company of New York. Although this type of interrupter works in a very satisfactory manner where direct current is available and the current employed

Digitized by Google

is not heavy, its application is very limited on account of the fact that heavy currents will heat the tube and finally break it. Although there are many different kinds of electrolytic interrupters, they all possess some fault. The rate of the interruption of the current is never uniform, an electrolyte of some acid solution is necessary and the attention they require classes them with other interrupters in general inefficiency, except for experimental work. Their action depends upon the fact that when an electric current is passed through a solution, there takes place an electrolytic action which sets up decomposition of the liquid, and gas forms as a result. It is claimed by some that in an electrolytic interrupter the gas, which is Hydrogen and gathers around the platinum point of the tube, insulates the contact for a time, and as the gas itself is light, it leaves the point and rises to the surface of the liquid. Also that this action of rising is assisted by the explosive properties of Hydrogen gas when mixed with water vapor or pure Oxygen, and as soon as the contact is partially restored, a spark takes place which explodes the gas, and the contact is again made between the two immersed electrodes by means of the conducting electrolyte.

Self-Induction.

When current, whose value changes, flows around the coils of an electro-magnet, it magnetizes the iron core and causes lines of magnetic flux to expand from the core. These lines, which are closed loops of magnetic force, cut the coils or wire in the electro-magnet in expanding and produce in the electrical circuit an E. M. F. which is opposed to the E. M. F. trying to produce a flow of current through the entire coil. This opposed E. M. F. is termed Counter E. M. F. and is the effect of the Self-Induction. Counter E. M. F. may therefore be defined as the E. M. F. produced in a circuit when the current values in it are changing and which opposes the E. M. F. applied to the circuit.

If the current be of a constant value, the magnetic field will have been established, and the lines of force will remain in a fixed position as long as the current remains constant and flows in one direction only. Consequently, as no lines of force are moving, there will be no conductors cut by them, and no counter E. M. F. would be produced as a result. This explains why a continuous current encounters no resistance to flow due to self induction after the magnetic field has once been established.

Digitized by Google

Inductance of Straight Conductors.

Thus far we have spoken of the phenomena following the effects of Self-Induction as though a *coil* of wire were necessary to produce such effects. This is not true as there is a magnetic field around even a straight wire which we see suspended from our electric light poles if there be current on the wire, and if it be alternating current, the magnetic field is constantly expanding and contracting as the value of the current producing it changes, therefore there will be a counter electro-motive force produced just as there is when the wire is coiled and around a magnetic material. The effects are more pronounced, however, when the wire is coiled than when it is straight.

The Henry.

Inductance may be defined as that quality of a circuit by virtue of which energy may be stored up in connection with it in the form of a magnetic field when a current flows upon the circuit. The unit of Inductance is the Henry and its symbol is L. The number of Henrys inductance which a circuit possesses depends upon its shape, the magnetic permeability of the material surrounding the circuit or enclosed by it, and upon the size and shape of this material. It will be seen from the above statements that Inductance is a *quality of a circuit.* Self-Induction is a quality of a *current,* the flow of which under a certain condition will produce counter E. M. F. The condition necessary to produce this counter E. M. F. effect is that the circuit sustaining the flow of current possesses the quality of Inductance.

CASE A. When a circuit possesses 1 Henry of Inductance and is traversed by a current of one ampere strength, there is a magnetic field set up in connection with the circuit which contains one hundred million lines of flux. If these one hundred million lines be removed from the circuit at a constant rate and in one second, there will be an E. M. F. of 1 volt generated while the removing process is being accomplished. This latter E. M. F. is not counter E. M. F. as it is in the same direction of that whose current produced the one hundred million lines primarily and tends to *prolong the flow of current.*

CASE B. When a current flows upon a circuit, for example, from a battery, a magnetic field is established around the circuit and the act of establishing this magnetic field creates an E. M. F. opposing the E. M. F. of the battery and tends to stop the flow of

Digitized by Google

current. This is also Self-Induction, but in this case, the result was counter E. M. F.

In Case B, self-induction impeded the introduction of current to a circuit while in Case A, it impeded the dying out of the current, that is, tended to prolong its flow. On account of this fact, self-induction bears the same relation to electricity that Inertia does to matter. The coefficient of self-induction is the Henry, and the latter is the unit of Inductance, so that the relation between the two is apparent.

Calculation of Inductance.

In wireless telegraphy, we have use for coils of wire, one of which we call a Helix. In all calculations to find the wave length of waves such as are used in wireless, it is positively necessary to know what the Inductance is, and there are certain formulas which are used to determine the inductance in Henrys. Probably one of the most accurate ones which will apply to helices ordinarily used is given below, and is stated by L. Cohen to be correct within ½ of 1% when the length of the helix is twice its diameter, and the formula increases in accuracy as the ratio of diameter to length increases.

$$L \text{ (in Henrys)} = 4\pi^2 n^2 \left\{ \frac{2a^4 + a^2 l^2}{\sqrt{4a^2 + l^2}} - \frac{8a^3}{3\pi} \right\} \times 10^{-9}$$

In the above formula, n is the number of turns of the conductor per centimeter, a, the radius of the helix in centimeters, l is the length of the helix in centimeters, and π the ratio of the diameter of circle to its circumference. Although this is not exactly accurate within the limits described by Cohen for high frequency currents, it may be used for approximate results, and is indeed very useful for wave meter calculation.

Inductance of Straight Wires.

It is the author's intention to avoid complex mathematical equations as much as possible, but for the benefit of those who may find the calculation of inductance interesting, the following formula is given for use in calculating the inductance in Henrys of straight wires such as are used in the aerials or leads of wireless sets.

$$L = 2\,l \left\{ \log_e \frac{2\,l}{R} - 1\cdot \right\} \times 10^{-9}$$

Digitized by Google

In this formula l is the length of the wire in centimeters, R its radius in centimeters, and 10^{-9} the C. G. S. equivalent in Electro-magnetic units.

As was stated, certain errors creep in when calculating the inductance of any helix or circuit when it carries high frequency alternating currents. Fleming states that "there is always a certain dielectric current between the turns of the wire, which acts to diminish the effective inductance, and it must not be assumed that a coil (helix) has exactly the same inductance for high frequency currents as for low frequency currents, apart altogether from the variation of distribution of current over a cross section of the wire. The inductance for high frequency currents will always be less by somewhat an uncertain amount owing to the *dielectric current between the turns.*"

Reactance and Impedance.

Reactance may be defined as the extra opposition offered by a conductor to a current which is changing in value. It may be measured in Ohms, and depends upon the number of coils in the circuit and upon the frequency of the change of the current values. A formula is given below for the reactance in Ohms.

Reactance $= 2\pi \times F \times L$, where F equals the frequency, and L the coefficient of self-induction.

Impedance equals the square root of the sum of the resistance squared and the reactance squared. The amount of current which will flow through a circuit containing both resistance and inductance may be mathematically calculated in the following manner, which is best illustrated by an example. Suppose that a circuit of 0.25 Henrys self induction and 50 Ohms resistance is conducting alternating current at a frequency of 60 cycles, at 10,000 volts E. M. F. What current will flow in the circuit?

Reactance $= 6.28 \times F \times L$
Reactance $= 6.28 \times 60 \times 0.25$
Reactance $= 94.2$ Ohms reactance

Resistance squared	$= 2500$
Reactance squared	$= 8873$
Sum of the squares	$= 11373$

Digitized by Google

Square root of sum of squares = 106.6 approximately, then Impedance equals 106.6, nearly.

$$I = \frac{E}{\text{Impedance}} = \frac{10{,}000}{106.6} = 93.8,$$ which is approximately the strength of current in amperes which would flow on an alternating current circuit containing the above inductance and resistance at a pressure of 10,000 volts.

The Hysteresis of Iron.

It has always been assumed by wireless engineers that iron could not be used as a core for the oscillation transformers and helices used in wireless telegraphy and telephony. The contention has been that iron is not able to become magnetized and demagnetized as rapidly as would be necessary. This contention is not held by Dr. Steinmetz, however, and he expresses himself as follows regarding the judicious use of iron in the core of our helices and oscillation transformers:

"As you know, in wireless systems we transform the energy produced by the oscillating discharge from the voltage of the generator circuit to the much higher voltage impressed upon the antenna, by a transformer or auto-transformer, which is an air core apparatus. In these cases we deal not with alternating voltages, but with oscillating voltages; trains of waves which gradually, and usually quite rapidly, decrease in amplitude and then die out. The important problem, then, is to get the rate of dying out, the attenuation of the waves, as low as possible, to get as well sustained waves as possible, that is, to reduce the losses in transformation.

"Iron has not been used in these transformers, not always because people did not believe iron would follow the frequency, but because the general impression is that the losses in the iron, even when as thin as commercially feasible, would be so formidable as to greatly increase the attenuation, increasing the rapidity of dying out of the wireless wave." * * * * * * * * "this investigation seems to show that by using an iron core of proper proportion at wireless telegraph frequencies, we can materially improve the efficiency of the transformer or auto transformer, and so reduce the attenuation of the oscillating wave, and that is the problem of the power in wireless telegraphy.

"Naturally, this design may be more or less, possibly material-

Digitized by Google

ly modified, by the problem of the voltage that we have to generate, and the necessity of insulating for the voltage, which must be taken into consideration; but in general it seems from the conclusions of this paper that there should be a material advantage in wireless telegraphy in using iron core transformers, or auto transformers, instead of the air core apparatus used at the present time."

Digitized by Google

CHAPTER VI.

Capacity and Oscillatory Discharge of Condensers.

Fig. 1 shows an ordinary form of Leyden jar found in most laboratories, which derives its name from the place of its invention. We call any apparatus designed to collect and retain charges of

Fig. 1.

electricity for a short time a *Condenser,* or sometimes simply a capacity. In the Leyden jar of Fig. 1, if both the inner and outer coatings of the jar are connected to a source of supply of electricity, the charge spreads over the coating of the insulator of glass by means of this coating, which is thin tinfoil, and when the charging apparatus is disconnected, this condenser is said to have been charged. That is, a quantity of electricity has spread over the surface of the glass.

Dielectrics.

The insulator, which was glass in the case of the Leyden jar spoken of above and which was between the tinfoil coatings, is called the Dielectric of the condenser, and the coatings themselves the plates of the condenser.

The capacity of a condenser to collect a charge of electricity is measured in *Farads.* The Farad, however, is a very large capacity and so we employ the Micro-Farad, which is one one-millionth of a Farad.

Any body may have a capacity with regard to another body. The earth, for example, might be said to have a certain capacity with respect to some other planet. Also a body is said to possess isolated capacity when considered alone in space.

The capacity of a condenser is ofttimes confused with the *total* quantity of actual electricity upon it. Consider a metal vessel of one gallon capacity. With the stopper removed there is one

Digitized by Google

gallon of air in the vessel. By an air pump and suitable connections through the stopper, we may, *by raising the air pressure* increase the *quantity* of air in the gallon vessel, yet, the actual size of the vessel has not increased. Analogously, the quantity of electricity upon a condenser may be increased by raising the electrical pressure, yet the actual capacity of the condenser may not have increased.

Dielectrics may be any insulating substance,—the air, glass, mica, rubber, paper, paraffin and so forth, and material used depends upon the purpose of the condenser. In wireless telegraphy, condensers are a necessity, but as the electrical pressure is very great, we must use a dielectric of such strength (commonly spoken of as dielectrical strength) and thickness to be able to stand the strain. The number of volts pressure which will rupture a dielectric is termed the "Puncturing Voltage" of the material and is, of course, understood to mean a certain thickness of the material under consideration. The following table gives the puncturing voltage of a number of different materials, many of which are used as dielectrics in the manufacture of condensers.

TABLE OF APPROXIMATE DIELECTRIC STRENGTH IN VOLTS PER MILLIMETER OF VARIOUS SUBSTANCES.

Cambric oiled	17000
Canvas oiled	5000
Celluloid clear	14000
Celluloid colored	19000
Coal-tar pitch	2000
Cotton cloth	3500
Ebonite	30000
Empire cloth	10000
Fullerboard	16000
Glass, ordinary	8000
Glass, lead	5500
Hard rubber	10000
Hard rubber, extra quality	38000
India rubber	18000
Linen cloth	5000
	8000
Manila paper	5000
Marble	6500

Digitized by Google

Mica	17000
	28000
Oiled cloth	18000
	23000
Oiled paper	25000
	30000
Para rubber	18000
Paraffin	11500
Porcelain	9000
Rosin	11000
Wax	11500

Condensers are used in our telephones, but in this form of condenser a thick dielectric is unnecessary as the voltage which is used in this instance is very low. For a two Kilowatt wireless station supplied with an alternating current at a frequency of 60 cycles, the size of the condenser used is from .0125 to .02 micro-farads. In our telephones, condensers of from one to two micro-farads are not uncommon. Those who have seen a battery of Leyden jars used as a capacity for a two Kilowatt wireless station will undoubtedly wonder at the apparent clumsiness of a high voltage wireless condenser when compared with the size of an ordinary one micro-farad telephone condenser whose dimensions are about 1 1-3 by 1 by 4 inches. This may be explained by examining the formula which is used for determining the capacity of condensers. Approximately the capacity of any condenser is found by dividing the product of the area, dielectric constant and 2248 by the thickness of the dielectric multiplied by 10,000,000,000.

$$\text{Or C (in micro-farads)} = \frac{2248 \times K \times A}{d \times 10^{10}}.$$

This equation demands that all dimensions be in inches and square inches. The area A used in the formula is the area of the smaller plate of the condenser, and not of the two plates. This is perhaps more apparent when we remember that a tin plate one foot square when supported a certain distance above the earth would form one plate of a condenser whose capacity would be defined by the area of the tin plate, and not the area of the earth. Nor would the area of the tin plate, 144 square inches, be added to a similar area of the earth's surface, but we would only consider one 144 square inches for use in the formula.

The number 2248 is the constant quantity to be used in all

Digitized by Google

condenser capacity calculations, where the dimensions are in inches, and is derived from another method of capacity calculations.

The dielectric constant, K, used in the formula, is the relative comparison of the capacity of a condenser of a certain size having air as a dielectric, to one of the same size having some other material as a dielectric. Air is taken as a standard or 1, and it is found that the capacity of a condenser having mica as a dielectric for instance, is eight times that of a condenser which has the same area and dielectric thickness but uses air as the dielectric. Hence we may say that the dielectric constant of mica is 8.

Below will be found a table of dielectric constants of some of the ordinary substances used as dielectrics for condensers.

Table of Specific Inductive Capacity of Various Dielectrics.

Air	1.0000
Alcohols	
Amyl	24.0000 to 27.0000
Ethyl	32.65
Methyl	22.8
Propyl	7.5
Benzine	2.3
Castor Oil	4.7
Olive Oil	3.12
Petroleum	
Crude	2.07
Ether	1.92
Headlight	2.11
Sperm Oil	3.06
Turpentine	2.3
Vaseline	2.17
Glycerine	56.00
Ebonite	2.5
Glass	
Density 2.5 to 4.5	5.00 to 10.00
Double extra dense flint density 4.5	9.90
Dense Flint (3.66)	7.38
Light Flint (3.20)	6.70
Very light Flint (2.87)	6.61
Hard Crown (2.485)	6.96
Plate Glass	8.45
Hard, New	3.11

Digitized by Google

Hard, Old	6.96
Gutta percha	4.1
Mica	8.0000
Paraffin	2.0000
Pitch	1.8
Porcelain	4.38
Rosin	2.48
India Rubber (pure)	2.12
Rubber, Vulcanized	2.69
Shellac (average)	3.11
Sulphur	3.1
Wax	1.86

Where the dimensions of a condenser are given in centimeters use the following formula for capacity in micro-farads.

$$C \text{ (in micro-farads)} = \frac{885 \times K \times A}{d \times 10^{10}}.$$

If the thickness of the dielectric is given in centimeters and the area in inches, always convert one of the different dimensions to either centimeters or inches, so as to use only the same system of measurement in the formula employed.

When there are more than two plates of the same condenser, use the added areas of all the dielectrics immediately between the plates.

Often the voltage is too great for the kind of condensers we have at hand, so they are connected in series, that is, the current must be taken into one of them and out, then into and out of the next, and so on. This divides up the pressure so that a single condenser will not be obliged to stand the whole electric strain alone.

The total capacity of a group of condensers in series is less than that of a single condenser and is reckoned thus:

$$C = \frac{1}{\frac{1}{C_1} + \frac{1}{C_2} + \frac{1}{C_3} \text{ etc.}},$$

where C_1, C_2, and C_3, are the capacities of the condensers used to make up the series group.

Where the construction of the condenser will permit, condensers may be placed in parallel. In this case,

$$C = C_1 + C_2 + C_3, \text{ etc.}$$

Digitized by Google

When Leyden jars are used, series and parallel connections are easily explained, inasmuch as where three jars are to charge

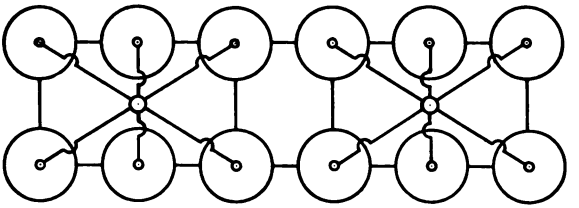

Fig. 2.

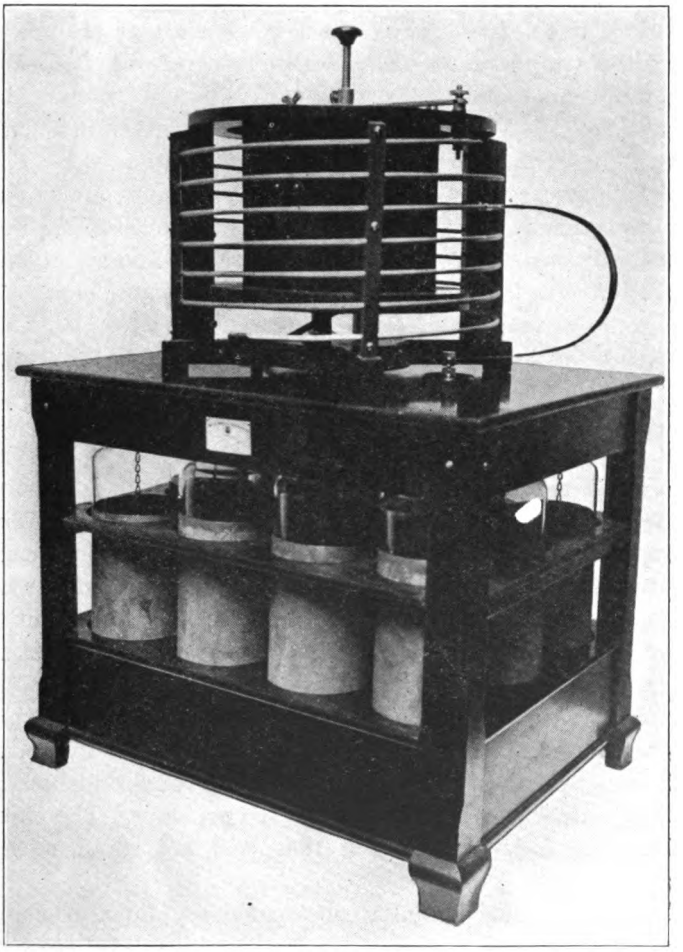

Fig. 2A.

Digitized by Google

in series the conducting wire is taken to the outside of the first, from the inside of the first a lead is taken to the outside of the second, and from the inside of the second a lead is taken to the outside of the third, and the other wire conducting the charging current is connected to the inside of the third jar. Inside and outside refers to the inner and outer coatings. In parallel, the three insides are connected together and to one conducting lead, and the three outsides to the other.

A plan of a series multiple is shown in Fig. 2. Here it is seen that no connections are taken from the outer coating, but the latter are all connected to one another by conducting material, and the connections to the two groups of six inner coatings are the terminals of the set. Fig. 2A shows a condenser for a 1 K. W. set, whose units are arranged in a slightly different manner than is shown in Fig. 2. This arrangement is sometimes more convenient to install than the arrangement necessitated by Fig. 2.

If each jar has a capacity of .003 M. F. then six are in parallel and have a total capacity of six times .003 or .018 M. F. We then see that the two groups of six are connected in series, and the formula for capacity would be

$$C = \frac{1}{\frac{1}{.018} + \frac{1}{.018}} = .009, \text{ the capacity}$$

of the whole twelve jars connected in series-multiple.

Fig. 3 shows a rack of 18 jars used by the United Wireless Telegraph Co. for a 60 cycle 2 Kilowatt station, having a capacity of approximately .0125 Micro-farad. These jars are copper coated by an electrolytic process, and are made of the finest flint glass. However, the best glass obtainable will sometimes be punctured, and this is one of the faults of these jars.

It can be seen by examining the formula for calculating capacity that the thickness of the dielectric is one of the very important factors which governs the capacity of the condenser. Obviously, the thicker the plate, the less the capacity. The objection to using thin dielectrics is that they will not stand very high voltages.

Condensers are sometimes constructed of plates of non-magnetic metal suspended in an air tight tank and insulated from it and from each other in such a manner that the air pressure inside the

Digitized by Google

tank can be raised by an air pump. Air, under pressure, possesses a greater resistance than ordinary free air at atmospheric pressure, and so its insulating quality increases with the pressure and serves

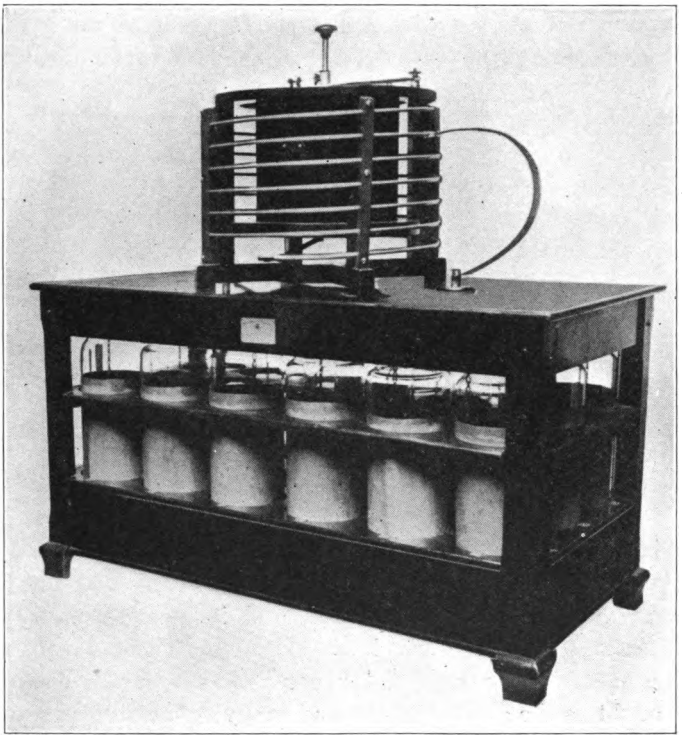

Fig. 3.

the purpose of a dielectric very well even for high voltages. If the air is accidentally punctured by a discharge, it quickly and automatically heals the rupture, and so nothing is injured in this type of condenser, even if the air pressure is allowed to decrease and a discharge between the plates takes place.

Hydro-Condensers consist of a metal tank filled with water in which are placed glass tubes closed at the bottom, and which also contain water. Connection is made with the tank for one terminal, and contact plugs are inserted in these glass tubes and make connection with the water therein. In working a wireless set supplied with Hydro-Condensers it is sometimes noticed that the spark tends to drag when the key is closed for sending. This annoyance may be partially eliminated by dissolving a table-

Digitized by Google

spoonful of bi-carbonate of soda in each glass tube, and about a pound to 8 gallons of water in the tank. This makes the water more conductive and the whole condenser seems to act more quickly. Where there is a liability of the water freezing this condenser does not make an efficient type for general use. There is also a great amount of loss on it, occasioned by surface leakage.

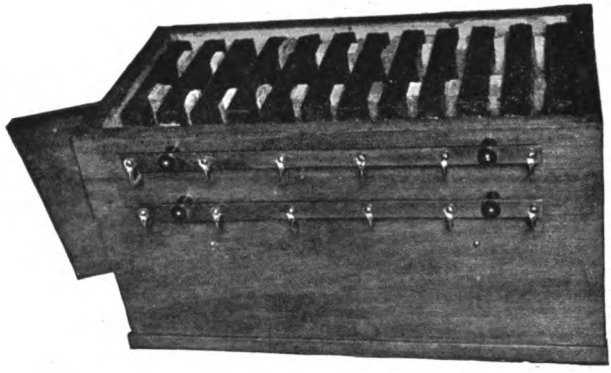

Fig. 4.

Fig. 4 shows a High Potential Condenser suited for a 1 Kilowatt 60 cycle set. This apparatus is manufactured by the Clapp-Eastham Co. of Cambridge, Mass., and is built in units of .01 Micro-farad capacity. The plates of glass are coated with a conducting material by a special process, and separate connections are brought to the outside of the mahogany containing box, making the total capacity for use a variable one. The plates are cast in a solid insulating material, which does not gather moisture, thus the losses due to surface leakage generally found in most forms of the other plate glass and Leyden jar condensers are nearly eliminated in this type. This makes a very efficient form of condenser.

Fig. 4A shows a condenser jar rack with condenser tubes enclosed, upon which is a 10 turn Helix. This type of condenser equipment is known as the "Shoemaker," and as can be seen consists of forty-eight copper coated tubes connected in series-parallel.

Quantity of Electricity on Condensers.

The quantity of electricity is, as stated previously, measured in Coulombs and when stored on a condenser is the product of the capacity C in farads, and the E. M. F. applied to its terminals.

Digitized by Google

That is, $Q=E\times C$. If a pressure of *10^6 volts were charging a condenser of one micro-farad capacity, then the condenser would accumulate a charge of one Coulomb on its plates. One Coulomb is also the quantity of electricity which passes one point in a

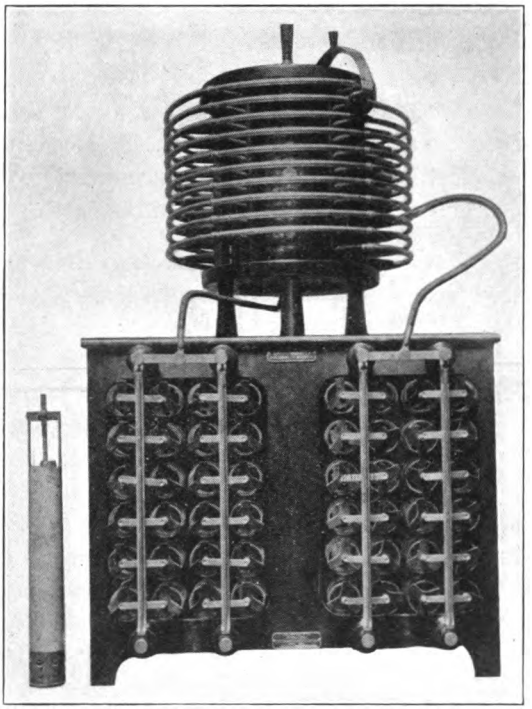

Fig. 4A.

second when one ampere is flowing in a circuit. From this it can be seen that the greater the quantity in Coulombs, the more the strength of current in amperes required. Keeping the voltage a constant quantity, 30,000 for instance, we will assume that two condensers C and C′ are to be charged. C is twice as large as C′, and would therefore accumulate a larger quantity of electricity upon its plates. As the quantity of electricity in Coulombs is also a product of the strength of current in amperes and the time, it is obvious that it would require a greater current strength in amperes to charge C than C′. Now, power in watts is the product

*10^6=1,000,000. $10^{-6} = \frac{1}{1,000,000}$.

Digitized by Google

of the E. M. F. and current strength in amperes and as it requires more strength of current to charge C than C′, it is apparent that more actual power was necessary to charge C, the larger condenser with a quantity of electricity equal in potential to that upon the smaller condenser.

Method of Charging Condensers.

The process of charging a condenser is explained by the aid of Fig. 5. Here we have two metal plates A and B separated from each other by a glass insulating plate C. B is connected to the terminal of an electric machine and A is grounded, i. e., connected to a water pipe or some good connection to the earth. The positive

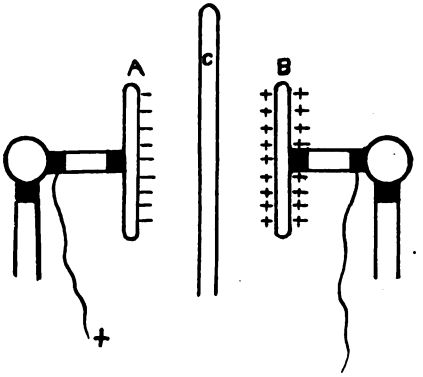

Fig. 5.

charge from the machine will act by induction through the dielectric C and repel a positive charge on A to the ground, leaving the plate A charged with negative electricity. This negative charge attracts more positive to it, which will come from the machine, and thus the charging is continued until the condenser accumulates all the charge possible with the potential applied.

Material for Condenser Coating.

The material with which the condensers are coated matters little as long as it is not of a high resistance. Tin, copper, silver, and their alloys are the principal materials used for the coatings of condensers. The action in charging and discharging a condenser is explained later.

Discharge of Condenser.

It can be easily demonstrated that when a charged Leyden jar such as shown in Fig. 1, has its terminals brought near together,

Digitized by Google

a spark takes place before the terminals are in actual contact. We see only one flash and hear only one report, but in 1842 Prof. Henry, of Princeton University, suggested that under some conditions the flash which we see is in reality composed of several flashes. His proof of this was obtained by using apparatus consisting of a small needle within a few turns of thick wire which was in series with a spark gap and a charged Leyden jar. The spark gap, consisting of two brass balls about an inch in diameter, was brought near enough together for the condenser to discharge across this gap of air, and through the coils of wire, thus forming a magnetic field about the coil which magnetized the needle. It would follow that if the flow of current were always in the same direction through the coil, that no matter how many needles were successively magnetised in this manner, the polarity of the needles with respect to the eye and the point, would always be the same, providing the needles were inserted in the coils in a like manner. However, Prof. Henry found that the polarity of the needles was sometimes reversed, thus proving that the current was not in the same direction at each different trial.

An explanation of the peculiarity of the reversed polarities is made by supposing that the discharge from the Leyden jar is oscillatory in character, that is, there is a flow of current first one way, then the other way, across the gap.

Although this explanation was only assumed by Henry to be correct, in 1853 Lord Kelvin proved mathematically that under some conditions the discharge possessed an oscillatory character, and under other conditions was not of an oscillatory nature.

Prof. Pierce describes the oscillatory discharge by stating that the electricity does not simply flow from one coating of the Leyden jar to the other, until the charges are neutralized, but rushes back and forth between the two coatings and through the coil and spark gap a great number of times with a frequency which depends upon the capacity of the jar in Farads, and the inductance of the coil in Henrys. That is, at the second discharge, the positive and negative sides of the Leyden jar are reversed.

By photographing the spark discharge of a condenser, the proof of its oscillatory nature has been conclusively established. Dr. Feddersen of the University of Leipsig, performed this experiment in 1859, using a rapidly revolving mirror to reflect the light of the spark upon a sensitized plate and obtained a photograph which shows that the conditions at the spark gap change several

Digitized by Google

times during a complete discharge. At first one side of the spark photograph was bright and then the other side. The number of spots on the photograph form a very accurate means by which the time consumed in one complete reversal can be measured, as the speed of the revolving mirror is kept constant and is of a known rate.

Apparatus consisting of a moving photograph film has also been used for the purpose of spark counting.

Electric oscillations such as produced by the condenser discharge just described, are the means by which wireless telegraph signals are produced.

The frequency of the discharge may be mathematically computed by the following formula:

$$N = \frac{1}{2\pi\sqrt{L \times C}}.$$

N represents the frequency in cycles or complete reversals per second, L the inductance of the circuit in Henrys, and C the capacity of the condenser in Farads. The equation is of the utmost importance in calculating the length of the wave radiated by a circuit.

When λ represents the wave length, it is equal to the velocity of the electro-magnetic waves divided by the frequency, or

$$\lambda = \frac{V}{N},$$

where V equals 300,000,000 meters per second and N equals the frequency.

For a masterful handling of the equations and other mathematics which lack of space does not permit being given here in detail, the reader is referred to the "Principles of Electric Wave Telegraphy and Telephony," by J. A. Fleming, Pender Professor of Electrical Engineering in the University of London, and also to the "Principles of Wireless Telegraphy," by Geo. W. Pierce, Ass't. Professor of Physics in Harvard University.

Oscillatory Discharge Explained.

An explanation of the true reason for the oscillatory discharge of a condenser may be found by an examination of the condition of the instruments concerned before the discharge takes place and during the time of the discharge.

Digitized by Google

The light which is radiated from an ordinary arc lamp such as is used for street lighting is, in reality, the particles of carbon heated to a point of incandescence, and being vaporized, fill the space between the arc light carbons. That is, the carbon is divided up into very small particles by the process which is called disintegration.

In Fig. 6 is shown the plan of apparatus which Lord Kelvin used in his experiments from which he obtained his ideas regarding the oscillatory discharge of a Leyden jar. This apparatus consisted of the Leyden jar, a coil of wire, and spark gap. In the case of

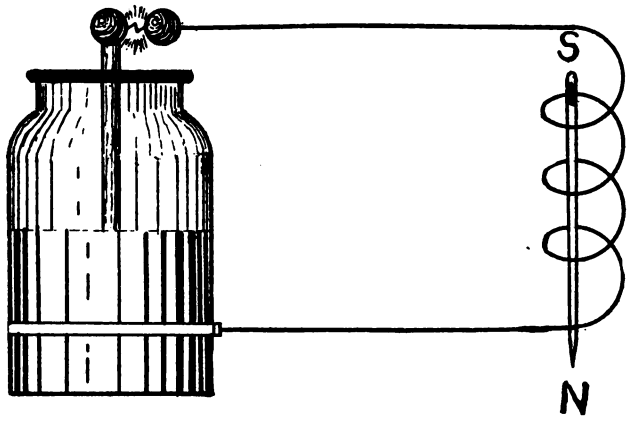

Fig. 6.

the arc lamp as described above, it is probably well known that the carbon electrodes are some distance apart in the air after the arc starts. However, after the arc *is* started, the resistance of the air between the electrodes is very small indeed, compared with the resistance of an air gap of the same length but sustaining no arc. As was stated, the lower resistance of the air gap is due to the large number of small particles of heated carbon moving back and forth (if an A. C. arc), between the carbon electrodes. Were it not for these particles no current would flow across the gap, as the arc light potential is too low to force currents across the space between the carbons when there are no conducting particles to assist. This applies to the spark gap of Fig. 6 as well as to an arc light gap.

To assist us in this explanation, let us consider a certain spark gap which is set to break down at a certain voltage, that a condenser is in circuit with it and a coil of wire possessing inductance, that the outside coating of the jar has been charged positively,

Digitized by Google

making the inside negative, and that the electricity is actually flowing across the spark gap, the electrodes of which have been made to approach each other slightly to start the discharge. Now, some time is consumed in getting up a current of any value, caused by the self-induction of the coil which, as we have learned, acts in a manner to oppose any quick change in the current strength. By the time the current has attained its greatest value, the difference of potential of the condenser has fallen to zero, and it is completely discharged. But on account of self-induction the current cannot stop flowing at once, but continues for some little time after the condenser has been completely discharged. That is, the magnetic field around the circuit which has been established by the current in its flow collapses upon the circuit and produces an assisting E. M. F. which charges the condenser oppositively to what it was when the first charge began.

There was, however, a loss during the transaction, some of the electrical energy being converted into heat, some into light and sound, and some into electro-magnetic waves. Were it not for the lowered resistance of the spark gap due to vaporization of the electrodes, the second charge which the condenser acquired would not have been of a sufficient potential to have started a flow again across the gap on account of the losses named above. But, as in the case of the arc lamp, the resistance of the spark gap did lower, and as a result a surging back and forth of current takes place, there being less energy in each succeeding surge caused by the losses, and the whole number of discharges is termed a *damped train of oscillations.*

Attention is called to Fig. 7A. Here we have a circuit con-

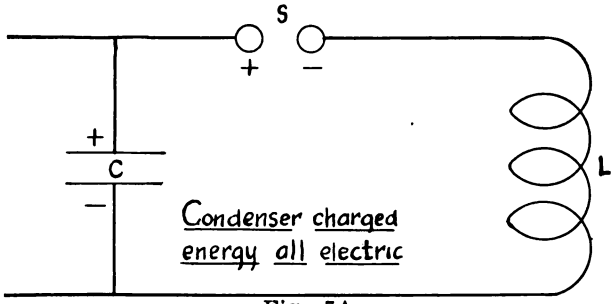

Fig. 7A.

sisting of a condenser C, coil of wire L, and spark gap S. The condenser is charged as shown and the energy is all electric. In Fig. 7B, the discharge has started across the gap, the action causing a

Digitized by Google

magnetic field to be set up around the coil as shown by the fine lines. There is no continuous current to sustain this magnetic

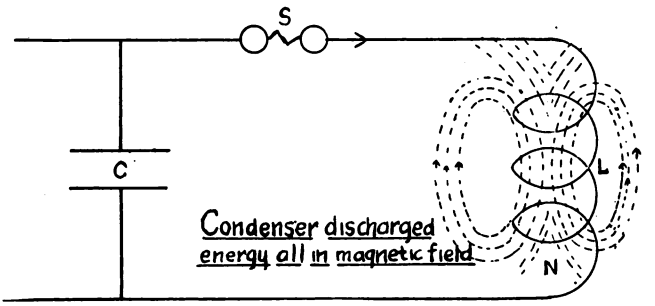

Fig. 7B.

field so it collapses upon the coil L and produces a flow of current directed as seen by the arrows in Fig. 7B, which charges the condenser as shown by the positive and negative signs and which, it

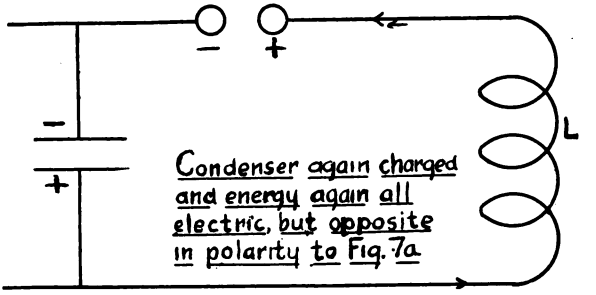

Fig. 7C.

will be noted, is opposite to Fig. 7A. At this moment the energy, less that which has been lost, is all electric and is in the form of an electric charge situated on the plates of the condenser C. The lowered resistance of the spark gap now has its effect and another flow of current is started across the spark gap, which produces

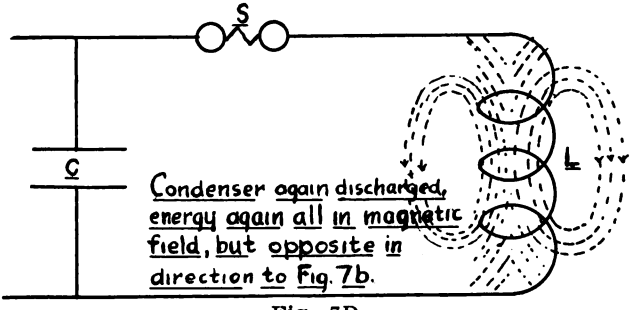

Fig. 7D.

Digitized by Google

another magnetic field as is seen in Fig. 7D, the energy being at this time again all magnetic, but the magnetic field is of opposite polarity to that in Fig. 7B. As in the previous case Fig. 7C, there being no constant source of current, the lines of magnetic force will collapse, producing another E. M. F., which causes another flow of current across the gap S, charging the condenser C, as shown in

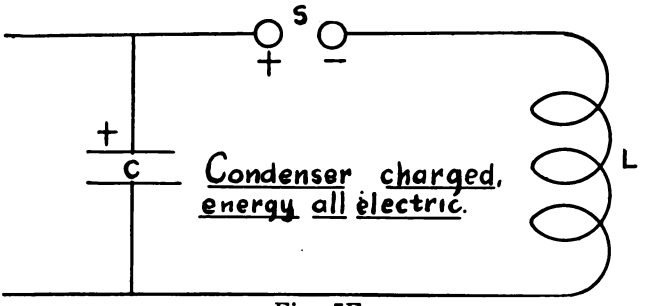

Fig. 7E.

Fig. 7E, the charges being exactly the same as before any discharge took place, as in Fig. 7A, but minus the energy lost.

Thus we have obtained two sparks across S, the currents producing which are different in direction, and at last have left the condenser in a charged condition to go through the process again if conditions permit.

If the values of oscillations at certain moments be calculated, we may plot a curve for damped oscillations, the character of

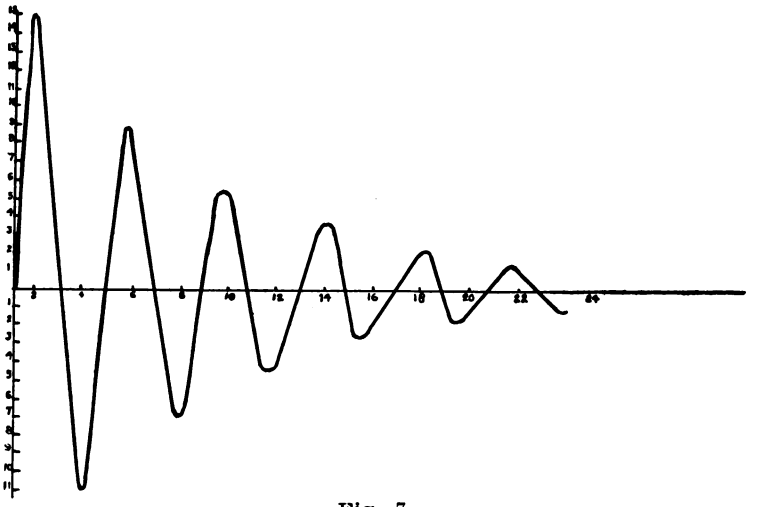

Fig. 7.

Digitized by Google

which is shown in Fig. 7. One oscillation, or a single surging to and fro is termed a damped Oscillation.

Damped oscillations may be defined as alternating current, the amplitude of whose each succeeding alternation decreases in value.

The whole action of the condenser in discharging through an air gap and inductance is compared to the action of water in a U-tube with a stop cock at the bottom of the tube. It is seen in Fig. 8 that one leg of the tube is filled with water. When the stop cock is suddenly opened the water will rush quickly through the stop cock and up the other side of the tube into the side which was empty until it reaches nearly the same height which it had in the other leg of the tube. Now gravity will come into play and the water will again rush through the stop cock and up the leg of the tube that it first occupied, but this time it reaches a much lower level than in its first rush or surge, and this action will continue until the water finally comes to a state of rest and the same level on both sides of the tube. Were there no friction on the sides of the tube and between the molecules of the water, and were there no force of gravity to work against, this surging would continue forever.

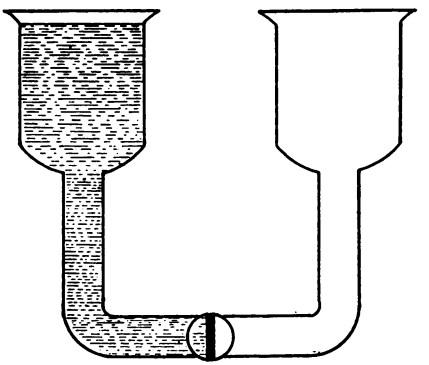

Fig. 8.

Losses on the Spark Gap.

In the same manner as the water in the U-tube described above acts, the charges on the coatings of a condenser would rush back and forth indefinitely were it not for the losses. Were we to decrease the size of the tube connecting the two legs of the U-tube described above, we would see that the water would rise gradually and with no rush, and no surging would take place. Likewise,

Digitized by Google

were the resistance of the Leyden jar and its appliances included in the circuit very great, the discharge would not take place in an oscillatory manner, but all of its energy would be dissipated in overcoming the resistance, hence no surging would take place.

Thompson's Equations.

The following equations were derived by Thompson, and letting R equal the resistance, C the capacity, and L the inductance, if $R^2 < \frac{4L}{C}$, the discharge takes place in an oscillatory manner. If $R^2 > \frac{4L}{C}$, the discharge is not in an oscillatory manner. So we see that although our eye may not be able to distinguish the difference, there may or may not be an oscillatory discharge and it depends upon the resistance through which the discharge takes place.

In a general statement we may sum up the matter by saying that the oscillatory discharge of a condenser is due first: to the inductance of the circuit which opposes the rapid change of the current and therefore time is required for the current to reach its greatest value; second, that when the current does reach its greatest value, the condenser is completely discharged and at that moment there is still a large current flowing; that on account of the self-induction of the coil, a decrease of the current is opposed so that the current really continues to flow after the E. M. F. of

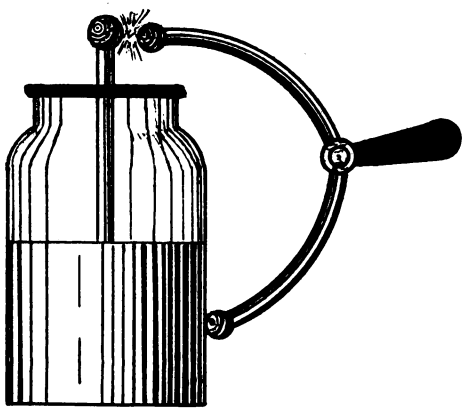

Fig. 9.

Digitized by Google

the condenser has reached zero. At this moment the condenser is being charged oppositely to its state before discharge and finally when the flow of current in this direction stops, the counter E. M. F. of the condenser comes into action and starts a flow of current in the opposite direction to that in its last process.

When there is a small inductance present in the discharge circuit, as in the case of the common discharging apparatus shown in Fig. 9, the oscillatory discharge is occasioned by the same things as described before, but the inductance of the discharging rod is, of course, very small.

Period.

The period may be defined as the time in seconds or fractions of a second of one complete oscillation, and where T represents this time, the equation used in determining the period of an oscillatory discharge may be expressed thus:

$T = 2\pi \sqrt{LC}$, where L is the inductance in Henrys, C the capacity in Farads, and π is 3.1416, the relation of the diameter of a circle to its circumference.

Frequency.

Although the discharge of any condenser, as before suggested, is slightly oscillatory, if the resistance is not too high the frequency or number of discharges per second is very great, as the inductance present in a simple discharger such as is shown in Fig. 9 is very small. This can be proven by examining the equation

$$N = \frac{1}{2\pi\sqrt{L \times C}}.$$

Obviously, as L decreased in value, C remaining the same, N will increase and sometimes the discharge of a condenser possesses an almost incomprehensibly high frequency.

The wave lengths employed in our present systems of wireless telegraphy should be above 300 meters, and as the wave length is found by dividing the velocity of electro-magnetic waves by their frequency, or $\lambda = \frac{V}{N}$, and from this N, or the frequency equals the velocity divided by the wave length, it is seen that the frequency necessary to produce a wave length of 300 meters in a resonant circuit would be 300,000,000÷300, which is 1,000,000. A condenser would have to be very large indeed to

Digitized by Google

possess capacity enough to give it a frequency of oscillation of 1,000,000 with as small inductance as a discharger in Fig. 9 would possess and the waves radiated by the discharge of such a condenser would be of a very damped character. As the latter condition is not desired, we may partially remedy it by inserting in the circuit in place of the discharging rod, a coil of wire of greater inductance, in this manner lowering the frequency and increasing the wave length correspondingly.

The addition of more inductance would then be desirable for the above reason, if for no other, but we shall see later why inductance in a discharging circuit is still more necessary.

Displacement Currents.

To some students it may seem inconceivable that condensers can be placed in a circuit and although the plates of the condenser are separated by a dielectric or insulator, a current seems to be flowing upon the circuit. The action of this current in apparently passing through the dielectric, seems inconsistent with the definition of the term dielectric.

Early investigators, among whom Faraday was a prominent one, assumed that when a condenser is charged, the whole phenomena is not fully described by merely stating that one plate gathers positive and the other negative electricity. This assumption of lack of definiteness was taken up by Maxwell, he making the assumption that, although the plates of the condenser be separated and kept apart by an insulator, an action takes place in the insulator itself which is something like the action of electricity flowing through a conductor.

Exactly what means Maxwell employed to work out his idea along this line is unknown, but Prof. Pierce represents Maxwell's idea by supposing that the insulating medium of a condenser, whether it be glass, oil, or air, is made up of small parts and that the electricity in these small parts of the dielectric or insulator may flow easily in the small parts themselves, but cannot flow from one part to the next. This may be on account of the insulating properties of the dielectric. If we think of these small parts as molecules, this assumed current in the dielectric may be the action of polarizing the molecules. For illustration, assume that the two plates of a condenser in Fig. 10, marked + and — which are separated by a dielectric, are being charged by the battery B. The + plate at the left is attracting — electricity and repelling

Digitized by Google

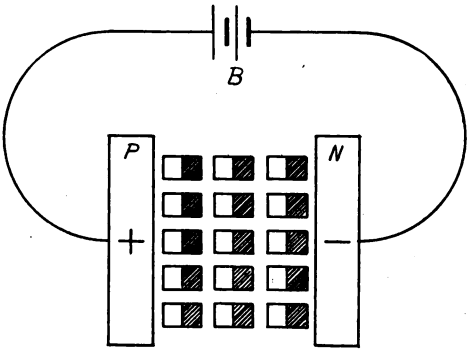

Fig. 10.

positive electricity in the layers of molecules nearest it, and that part of each molecule of the layer nearest the positive plate by the law of charges becomes negative, and the part farthest from the positive plate, becomes positive. Molecules in this condition are termed *Polarized Molecules.* Each layer of the molecules thus polarized will act upon the next layer, producing the same effect of polarization so that all the molecules of the entire dielectric acquire this polarization.

Some investigators have stated that this action is typically and merely electricity produced by induction, and although there is not an actual transfer of electricity between the dielectric molecules themselves as we would think of electricity being transferred on a conductor, the effect of this general transfer of electricity by Induction is the same as if the dielectrics were a conducting substance. This transfer of electricity in the dielectric, Maxwell called a *Displacement Current.*

When a condenser is being charged, the directions of the charging current and the displacement current are the same, so that the electrical circuit may be said to be completed through the condenser by the displacement current. At discharge, Pierce states that the dielectric loses its polarity and gives rise to a displacement current in it. Like the action of discharging, the action of the displacement current completes the circuit for the discharging current.

Digitized by Google

CHAPTER VII.

Electro-Magnetic Waves.

It has been shown that it is possible to obtain currents of low potential by specially designed generators, how these currents of low potential may be converted to currents of great E. M. F., how these high potential currents will charge condensers whose discharge under certain conditions is oscillatory in character, and that these oscillations are the means by which our wireless messages are transmitted.

We will now investigate the manner in which these oscillations are driven away from the aerial of our wireless stations in the form of ether waves which will travel from point to point and be readily detected by specially designed instruments.

It has been said that these oscillations are really alternating currents of very high frequency whose amplitude decreases with each succeeding oscillation. That is, the oscillations are *damped.* Up to the present time, no method has been evolved by which electric waves are produced except by the excitation of oscillatory currents in a circuit possessing both inductance and capacity, so that a study of the more simple forms of oscillators will prove beneficial.

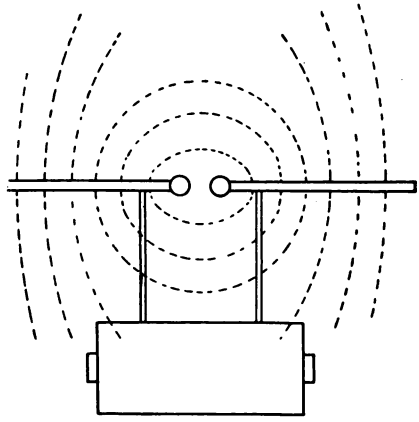

Fig. 1.

A Linear Oscillator consists of a pair of conducting rods placed in a line with their inner ends a very short distance apart.

Digitized by Google

If these rods are connected to the secondary terminals of a spark coil in operation, the rods will be charged, one positively, and one negatively at each alternation. These rods have a certain capacity with respect to each other, that is, they form the plates of a very small condenser having air as the dielectric. At the instant that they become charged, there exists in the surrounding ether lines of electric strain, some of which may be represented by the dotted lines in Fig. 1.

Now in Fig. 1, suppose that the potential of the induction coil be increased (thus increasing the difference of potential across the spark gap), until a spark passes between the rods. As these rods are, as stated, the plates of a condenser, the discharge will begin in an oscillatory manner. An electron may be defined as a unit charge of electricity, and as the total charge is composed of a great number of electrons, the movement of the whole charge is the movement of a large number of electrons. Joining two unit charges of opposite polarity there exist lines of electric strain, or as they are sometimes termed, lines of electro-static flux. Although there is a question as to whether these lines have a real existence or are imaginary, we think of them as having real existence for the purpose of explanation, and that they exert an elastic pull between positive and negative charges.

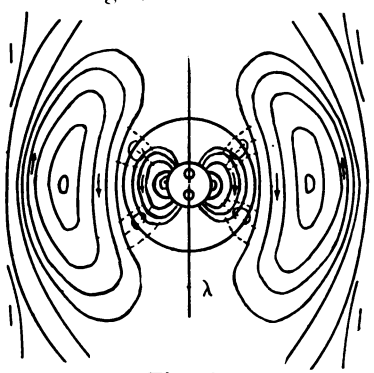

Fig. 2.

In Fig. 1 the lines of electro-static flux are represented as existing at an instant just before the discharge takes place. But on account of the repulsion of the lines whose forces are in same direction, wide loops are formed. If T represents the period of one oscillation, then in Fig. 2, $\frac{T}{8}$ represents the condition of

Digitized by Google

strain when the rods are being charged. Since the electro-static flux is changing, displacement currents will exist along these lines, and these currents will produce loops of magnetic flux whose planes are at right angles to the lines of electro-static flux.

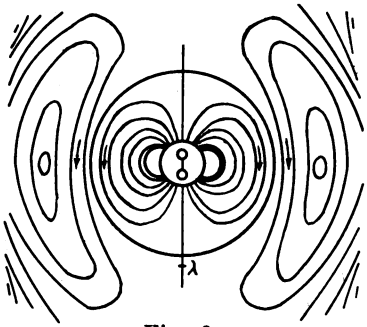

Fig. 3.

In Fig. 3 the condenser, (which is the rods of the oscillator in this whole case under consideration), is fully charged, and the outer lines are of the same polarity as the inner on each side of the oscillator, so that they try to spread apart just as the leaves of the electroscope diverge when charged with one kind of electricity, and from this action the lines attain an oval shape. This occurs at $\frac{T}{4}$, or one half the time of the first alternation.

At $\frac{3T}{8}$ or three-fourths of the period of the alternation, the oscillator is discharging. Now these lines of electro-static flux possess inertia, and require time to start in motion, so that as the E. M. F. on the conductor changes with great rapidity, these lines

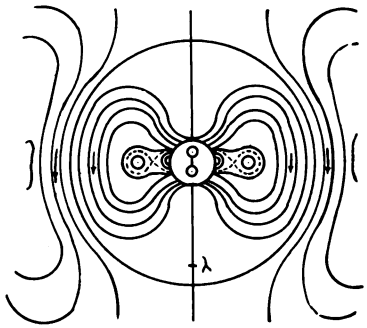

Fig. 4.

Digitized by Google

are unable to follow in their true form, but their outer dimensions continue to increase and take on something of a pear shape, as shown in Fig. 4. That is, the charges move down the aerial, oscillator or conductor with such rapidity that the inertia of the lines

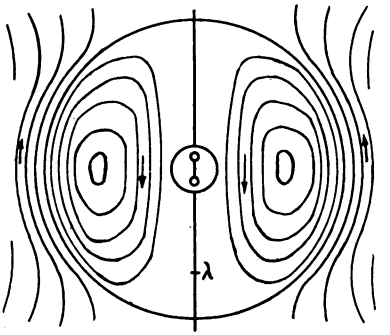

Fig. 5.

causes them to lag behind, as they cannot stop expanding and take on a receding movement as fast as the charges can move along the conductor of the oscillator or aerial.

In Fig. 5 the conductors are fully discharged, and the loop is entirely detached from the conductor. It might be said that there is a sort of short circuit of electro-static lines, and that they form closed loops as shown in Fig. 5.

These loops have certain polarity and the progress of a single line of flux is something as shown in Fig. 6. A shows the loop extended at charging of the conductor, B and C at the exact moment of discharge, and D is where the inertia of the moving charges upon the conductor causes not merely a neutralization at the point of meeting, but the charges temporarily exchange places, and thus

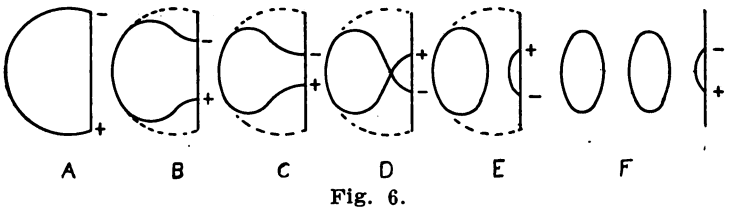

Fig. 6.

compel the lines of flux to cross and become detached, as their displacement currents may be said to complete their circuit in the same manner that the displacement currents in the condenser being charged complete the charging circuit. As seen at D, the polarity of the loop formed is the same on the inside and the

Digitized by Google

direction of the oscillation the same as the direction and polarity of the new loop whose electro-static lines are being expanded by the rising charges which were carried on past the meeting point by their inertia.

Each oscillation of the charges upon the conductor will produce a loop which is of such a polarity or direction of force that it will repel the side of the loop nearest to it. It would seem that there were two loops or waves produced by one cycle of the oscillator, thereby proving our formulas at fault. Regarding this it must be remembered that alternating current is defined as current which when plotted, consists of half-waves of equal area, in successively opposite directions from the zero line. Then we must have two loops to complete one cycle, and a wave length is the distance from crest to crest of each half-wave whose directions of force are similar. This is shown in Fig. 7. The arrows show the wave length λ, and directly above are the expanding electro-magnetic waves.

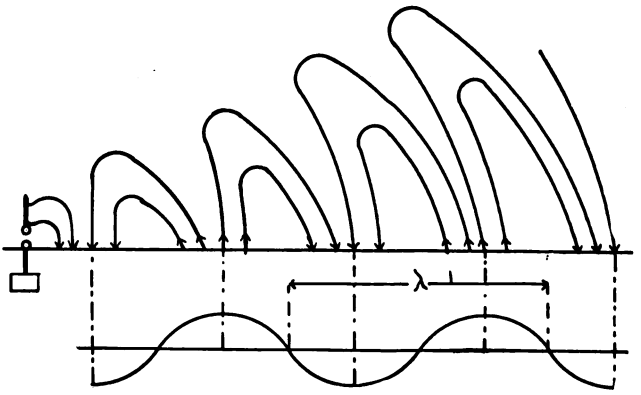

Fig. 7.

By a review of the foregoing, it can be seen that we have gotten waves off from the aerial or conductors, but when the oscillations of the exciter cease, then what would tend to keep these waves in motion? Unlike magnetic loops which are produced by varying currents upon a conductor, these electro-magnetic waves will never return to the aerial, but their energy must be dissipated as induced current in some conductor,—i. e., a receiving aerial. Now any movement of an electro-static line sets up a magnetic loop at right angles to the static line, and the energy of the electro-static line is absorbed by the magnetic loop in expanding. When the magnetic loop expands, it sets up new electro-static lines, which

Digitized by Google

again, contracting, expand still more magnetic loops farther away. The energy of the wave thus is constantly changing from that in the electro-static line to energy of magnetic loops, and the act of converting this energy is really what causes the wave to keep in motion.

It must be remembered that magnetic lines of force are set up by electro-static lines only when the latter are moving, and that a line of either force does not generate or induce the other when at rest, but a moving line of either force will induce the other. The reason for terming wireless waves electro-magnetic, then, is obvious.

The Image Theory.

In the foregoing, with the exception of Fig. 7, the waves have been treated as though they radiated from such an aerial as a Hertzian Linear Oscillator furnishes, but in the aerials now used one side of the open circuit is connected to the ground. A line of

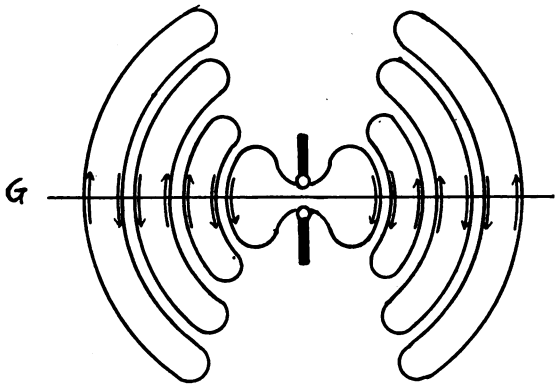

Fig. 8.

electric force must be either a closed loop or one end must terminate on a positive charge and the other on a negative of equal magnitude. This is what occurs when a loop is expanded upon an aerial with one end grounded. Could we see these loops expanding from our earthed aerials, the lower half which is present upon the charged Hertzian Oscillator could be imagined to exist in the earth itself and is said to be an image of the part above. Fig. 8 shows this imaginary condition, G being the surface of the earth, while Fig. 9 shows the real condition as it is supposed to exist. The loops shown in Fig. 9 have their ends situated upon positive and negative charges and these charges move upon the earth's surface with the wave and with the same velocity, *if the earth is*

Digitized by Google

a good conductor. The earth is therefore the guiding plane or conductor for the waves, and the loops of force whose ends are situated upon it follow its surface. This explains why two stations are able to communicate when the curvature of the earth

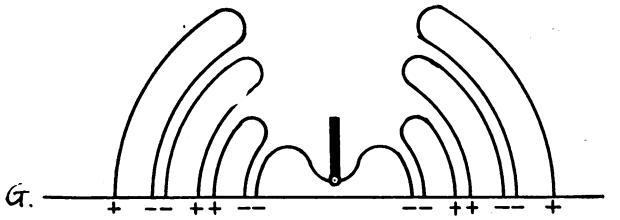

Fig. 9.

makes them invisible to each other or when high hills are between them.

Conductance of the Earth.

Street car companies, who at first made use of one trolley wire above and the earth as the returning circuit, found that in many cases the earth could not be depended upon as a perfect conductor. It has been found that sea water is one of the best conductors and moist soil a very good one, while dry soil or rock is a very poor conductor of electricity.

If the earth were a perfect conducting medium for electromagnetic waves, the alternate forces in a wave train would be perpendicular to the surface of the earth. This condition cannot exist, but propagation of the waves over the sea water will fulfill it as nearly as possible. In transmission over dry soil, the resistance of which is high, the wave becomes tilted forward, that is, the ends situated on the earth lag behind their top, and the electric forces in the wave will then induce charges in the earth's surface which action takes the energy from the wave, and decreases it until finally, if the non-conductivity of the soil is not decreased, all of the wave energy may be expended in inducing charges on the earth's surface, none arriving at the receiving station.

Data for the following table is taken from Dr. Zennick's equations and published in full in Prof. Pierce's "Principles of Wireless Telegraphy."

Digitized by Google

TABLE OF EQUIVALENT DISTANCES OF TRANSMISSION OVER VARIOUS KINDS OF SOIL AND WATERS. Distances in miles.

Perfect Conductor	Sea Water	Fresh Water	Damp Soil	Average Soil	Very Dry Soil
62.1	61.4	60.8	49.6	43.4	18.6
124.2	121.0	105.5	71.4	52.7	21.7
186.3	180.0	161.4	86.9	65.6	24.8
310.5	298.0	248.4	117.9	80.7	29.8
621.0	571.3	434.7	167.6	93.1	34.1

It is very interesting to note that if a station were situated on the sea coast and had as good a ground connection as possible and were sending signals *seaward* a distance of 571 miles, the station would not be able to communicate a greater distance *inland* than between 93 and 167 miles according to the table. Also, that if the power of the station be increased so that its range over sea water be increased nine times, under the same conditions its range over land would only increase about twice. This may explain the long distances worked by the Marconi Co. upon the high seas with only induction coils as a means to charge their condensers.

Reflection and Diffraction of Ether Waves.

Realizing the similarity of light, heat and electro-magnetic waves, it is not difficult to understand why the early experimenters undertook to and succeeded in reflecting and defracting Hertzian waves. Large hills diffract electro-magnetic waves and clouds have a tendency to do the same. At a height of approximately 35 miles, air becomes a good conductor and is transparent to ether waves of high frequency like light waves, but partially reflects and partially absorbs long ether waves such as are used in Wireless Telegraphy. This action of reflection is exactly analogous to the reflection described in a succeeding chapter on Hertz experiments.

Effect on Transmission of Daylight and Darkness.

While it is known that darkness aids the transmission of signals, and that cold weather acts in the same manner, the author has seen all theories exploded regarding the cause of what operators call "freak work", which are advanced by expert wireless engineers. This "freak work" is the reception of signals from some very distant station, or the transmission to the same, which, under ordinary conditions is impossible. Stations of short wave length will come in on long wave adjustments and the signals from very

Digitized by Google

distant stations are often so loud as to drown out even the loudest of signals which the receiving station ordinarily reads. Freak work is....freak work and no explanation of its cause will be attempted here. Marconi has proven and makes practical use of the fact that with long waves of over 2000 meters the absorption by daylight is not as pronounced as with short waves.

The author would suggest that operators who wish to assist in the advancement of Wireless Telegraphy make every effort possible to ascertain to what cause we may attribute "freak work", as the solution of this problem would probably lead to the advancement of wireless telegraphy in distance working.

Wave Lengths and their Measurements.

By calculating mathematically the inductance and capacity of the Helix and Condensers used in a wireless telegraph transmitter, and by supposing that the oscillation circuit is in a condition of resonance with the aerial circuit, (resonance means when the electrical length of the circuit containing the condenser, spark gap and helix is the same as that of the circuit comprising the aerial, helix and lead to earth connection), it would be possible to compute the length of a wave radiated by a transmitter. However, there are certain things which make this a very difficult and extremely unreliable method. The most accurate and practical method of determining the wave length of a transmitter is by means of such an instrument as was invented by Dr. Fleming and called by him a Cymometer.

This instrument may consist of a variable condenser and variable inductance combined in such a way as to form an oscillatory circuit. Means are provided for varying the inductance and capacity in the same proportion. This is accomplished by constructing a condenser of a tube of brass covered with ebonite, on the outside of which another concentric tube fits closely, but not so closely as to prevent the outer tube easily sliding over the inner. A helix is made by winding wire around an ebonite tube and a sliding contact is arranged to touch the wire. The outer brass tube of the condenser is connected to the sliding inductance contact clip so that a movement of this outer condenser tube to decrease the capacity would also decrease the inductance of the cymometer circuit. The inner tube of the condenser may be connected to a terminal of the copper wire helix by a copper bar. This scheme is shown in Fig. 10. In a convenient place a scale is ar-

Digitized by Google

ranged with a pointer attached to the variable inductance contact so that the inductance and capacity can be altered simultaneously. The total inductance as well as the total capacity of the helix and

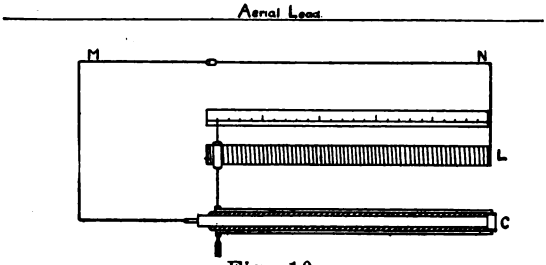

Fig. 10.

condenser respectively, are mathematically calculated and the whole divided up into equal divisions on the scale. That is, were the sliding contact on the center of the helix and the condenser consequently on half its total capacity, the scale would read in micro-farads and micro-henrys. Now the square root of the product of the capacity and inductance of a circuit is known as the *Oscillation Constant* of that circuit, and as the oscillation constant is an important factor in wave length calculation and the only variable features, by using the formula

$$\lambda \text{ (wave length)} = 2\pi \times V \times \sqrt{L \times C}$$

where L is the inductance in Henrys, C the capacity in Farads and V the velocity of electro-magnetic waves per second, the wave length may be easily ascertained. On this account, the oscillation constant is also placed upon the scale.

Dr. Fleming discovered that Neon, a gas which occurs in the atmosphere about 80,000th part by volume, has the property of glowing very brilliantly when placed in the electric field of an alternating current.

If a vacuum tube be filled with this rare gas and be provided with electrodes sealed in the ends of the tube so that its terminals can be connected to the terminals of the condenser of the Cymometer, and if oscillations are induced in the circuit of the Cymometer by some other circuit sustaining electric oscillations, the Neon tube will begin to glow. However, it will glow most brilliantly when the difference of potential of the tubes forming the condenser is at a maximum. *This condition can only exist when the circuit of the Cymometer is in resonance with the circuit which is inducing the high frequency current upon it,* and their oscillation constants must be equal.

Digitized by Google

Therefore, if the copper bar of the Cymometer be placed parallel to a lead to an aerial of a wireless transmitter, and the Cymometer circuit resonated by means of the Neon tube with the aerial circuit when it is sustaining oscillations, by examining the scale of the Cymometer we can immediately ascertain the oscillation constant of the aerial circuit as well as the Cymometer circuit

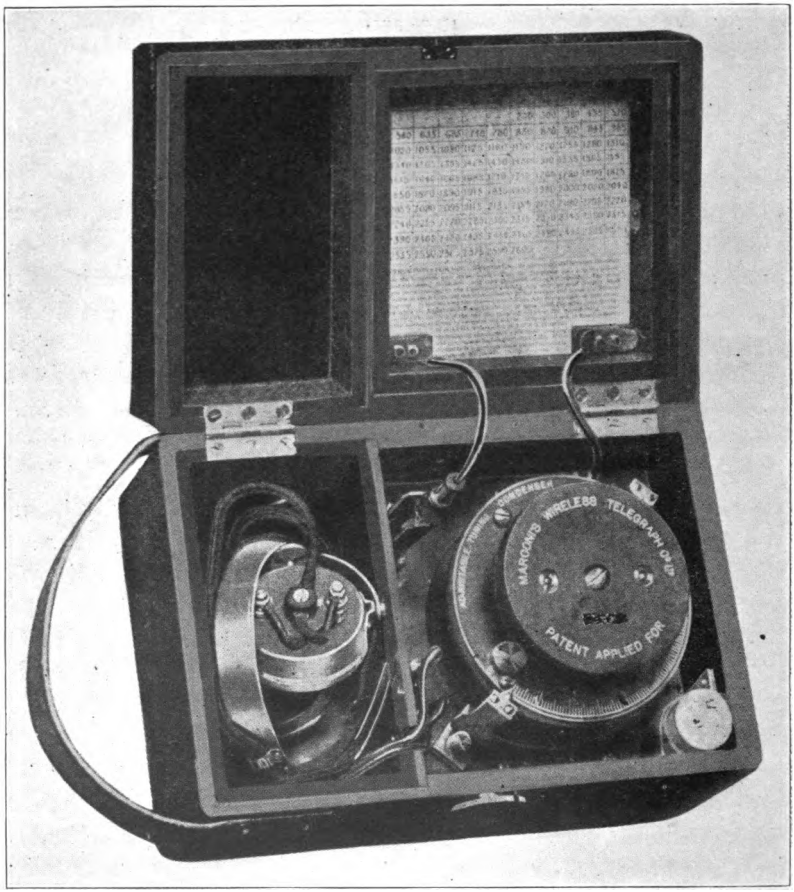

Fig. 11.

and the wave length can be calculated by the formula on a preceding page. If desired the Cymometer could be made to read in meters direct, making no conversion necessary. Fig. 11 is a photograph of a Marconi wave meter which works practically the same as a Cymometer.

Digitized by Google

Measurement of Small Inductances and Capacities.

The cymometer can also be used for measuring small inductances and capacities, the method being described by the inventor as follows:

"Each instrument is, or can be, supplied with a standard inductance consisting of one or more turns of insulated wire arranged around a rectangular frame. These inductances vary from about 4000 cms., or 4 micro-henrys, up to 75,000 cms., or 75 micro-henrys, depending on the pattern of the cymometer and use. If, then, a certain small capacity, say that of a Leyden jar, has to be determined, it is done in the following manner. The jar is placed upon a sheet of ebonite, and one coating is connected to one secondary spark ball of an induction coil, the other coating or terminal of the condenser being connected to one end of the above mentioned standard inductance, whilst the second end of the standard inductance is connected to the other secondary spark ball. The spark gap, condenser, and inductance are all connected in series. The cymometer is then placed with the copper bar parallel and not very near to one side of the standard inductance. On working the coil, oscillations are set up in the circuit of the jar and inductance, and the handle of the cymometer is moved until the Neon tube glows most brightly. The scale reading of the cymometer then shows the oscillation constant of the cymometer in that position (adjustment), that is to say, the value of the square root of the product of its capacity in micro-farads, and its inductance in centimeters in its then position. The value of this quantity is called the *oscillation constant,* and is marked on the scale. It then follows that the oscillation constant for the circuit containing the unknown capacity must be the same. Hence, if we square the value of the oscillation constant and divide by the value of the standard inductance in centimeters, we have the value of the unknown capacity in micro-farads. Thus for example, suppose that the standard inductance is 5000 cms., and that the maximum glow in the Neon tube occurs when the cymometer pointer indicates an oscillation constant 10 on the scale, then the square of 10 being 100, and the quotient of 100 divided by 5000 being 1/50, we know that the capacity of the condenser in question must be 1/50 of a micro-farad. The rule therefore is as follows: square the oscillation constant and divide by the value of the standard inductance

Digitized by Google

in centimeters, and the resulting quotient is the capacity of the jar or condenser in fractions of a micro-farad.

In the same way the cymometer can be used with a standard condenser *to determine the value of an unknown inductance,* for if we determine as above described the capacity of a condenser by the aid of a cymometer, then join up this capacity with the unknown inductance and the spark gap, to form an oscillation circuit, putting in, if necessary a yard of straight wire to lie parallel with the bar of the cymometer, and if we then determine the oscillation constant of this circuit, and find it to be O, then the inductance in the circuit must be equal to $\frac{O^2}{C}$, where C is the capacity of the condenser in micro-farads, and this quotient gives the inductance in centimeters."

Digitized by Google

CHAPTER VIII.

Early Experiments in Wireless Telegraphy.

In 1888 Prof. Hertz of Karlsruhe performed a great number of experiments, obtaining results which, even though the apparatus obtainable at that time was most crude, form the basis of the rudimentary knowledge applied to perfect our present systems of wireless telegraphy.

One of the first appliances used by Hertz to produce ether waves is now termed a Hertz Oscillator. In Fig. 1, R represents the induction coil which gave say a two inch spark, S, a spark gap attached to which were conducting plates C and C about 15¼ inches square, each attached to a rod about 11 4/5 inches long. The

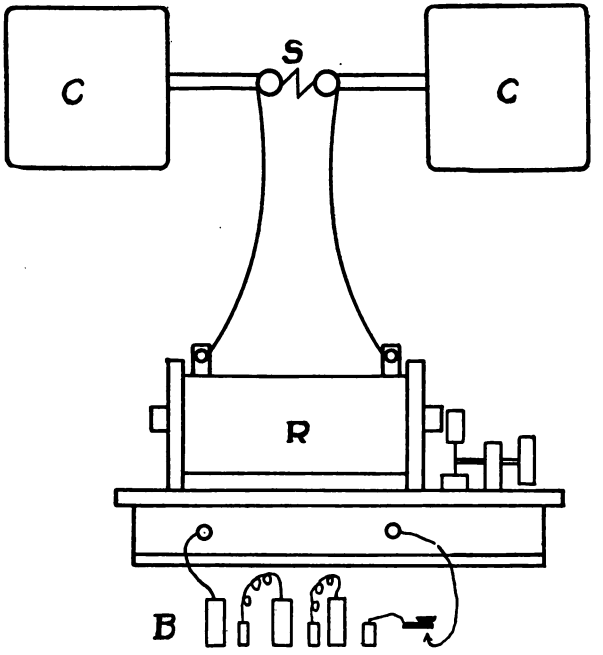

Fig. 1.

two rods were placed in line with one another, and at their inner ends provided with a spark gap of about 0.275 inches. The induction coil including a vibrator was operated by a battery. Each

Digitized by Google

interruption of the circuit by the vibrator produced a flow of current of high potential in the secondary winding of the induction coil, charging each half of the oscillator oppositely. The air insulation of the spark gap then broke down and the halves discharged in an oscillatory manner across the spark gap. The reason for this oscillatory discharge is easily understood when we consider that the two arms of the oscillator form the plates of a small condenser which has air as the dielectric. As each spark occurred, a train of waves was sent out from the oscillator. If the interrupter spring of the coil vibrates with such a speed as to produce in the secondary winding an alternating E. M. F. which for convenience we will term sinosoidal in character and having a frequency of 60 cycles per second, the two halves of the oscillator will be charged 120 times per second. The time consumed in charging will then be 1/240 of a second or half the time of one alternation. The heavy line in Fig. 2 represents the curve of E. M. F. of such an alternating current of 60 cycles frequency. The

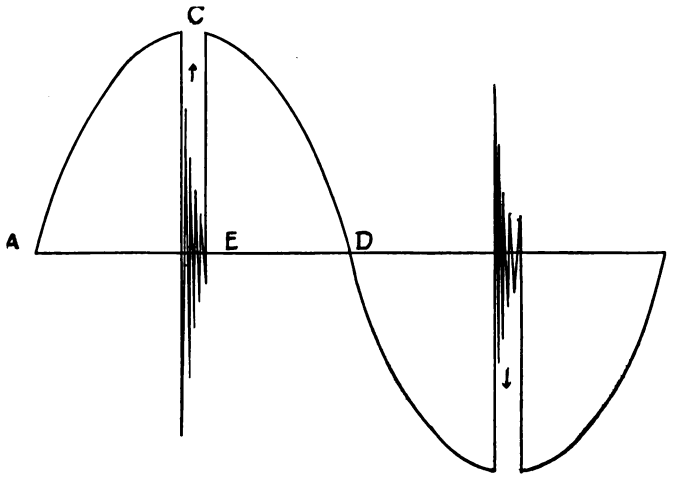

Fig. 2.

E. M. F. rises from A to C, and is represented by a force toward the top of the page. At C the condenser, which in this case is the two halves of the oscillator of Fig. 1, is charged, and the action has taken 1/240 seconds. However, the E. M. F. from C to D falls, taking another 1/240 seconds. This is the point which confuses, and it must not be understood that the condenser is discharging all the way from C to D, that is, consuming the whole interval of time represented by the space on the straight line be-

Digitized by Google

tween points E and D, but rather that only a very small amount of time is consumed in this operation of discharging. The light lines represent the discharge of the condenser which is seen to consist of oscillations of decreasing amplitude. The representation is crude, as it would be impossible to make a graphical representation of the oscillations owing to the very short space of time consumed by the complete oscillatory discharge. The time consumed in one complete oscillation can be calculated by solving the equation

$$T = 2\pi\sqrt{LC}$$

The total time elapsing between the beginning and ending of any oscillatory discharge would be the product of the time necessary for one oscillation and the number of oscillations in the train of oscillations.

It may be readily seen from the above that the oscillator, after having been charged, has very little to do with the charging appliance, and the frequency of the charging circuit (induction coil or transformer), must not be confused with the frequency of the oscillating circuit.

Although apparatus such as just described was known by Hertz to be a radiator of electro-magnetic waves, the first intimation that it possessed this quality was probably suggested by Steinheil of Munich in 1838. It remained for Hertz to really prove the existence of these, which he did by using for a radiator a Hertz oscillator, which was shown in Fig. 1, and a detector which we term a Hertz Resonator. This instrument consisted of a circular loop of wire about 27½ inches in diameter, whose continuity was broken by a very small air gap. Hertz found that at each spark on the oscillator, a corresponding spark would occur in the air gap of the resonator even if taken some feet away from the oscillator.

Just as we can reflect and defract rays of light, Hertz found that by means of prisms of pitch the electric waves radiating from his oscillator could be reflected and turned aside.

In 1892 the whole scientific world was fascinated by the experiments of Mr. Nicola Tesla with his high frequency electric currents. Also in the same year Sir William Crookes stated that electrical vibrations of a yard of more in wave length would pierce walls, fogs and other obstacles.

Digitized by Google

The Coherer.

In 1895 Mr. Marconi, near Bologna, began experimenting, using induction coils connected to metal balls for dischargers as a means of charging the radiator. For detector, he used an appliance which was discovered by Prof. Branly in 1890. This appliance which Prof. Branly called a coherer, consisted of a glass tube filled loosely with filings of zinc and silver and placed in series with a telephone and a voltaic cell as in Fig. 3, which when placed near an oscillator was found to act in a peculiar manner. The importance of this discovery will be realized when it became apparent

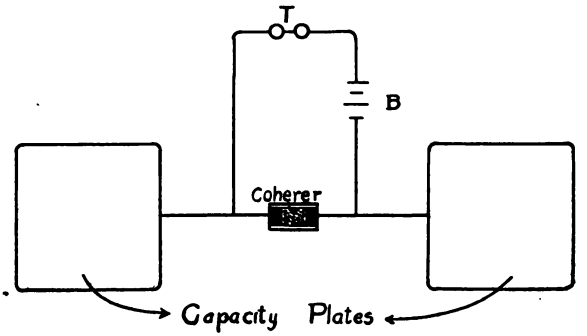

Fig. 3.

that a spark had the power of suddenly changing the resistance which the filings offered to the passage of current through them from a voltaic cell. Although this resistance may be very high just before the spark on an oscillator takes place, at the instant the spark passes and waves radiate the resistance is lowered and the current from the cell readily flows through the metal filings, thus producing a click in the telephone receivers. One form of this coherer is shown in Fig. 4.

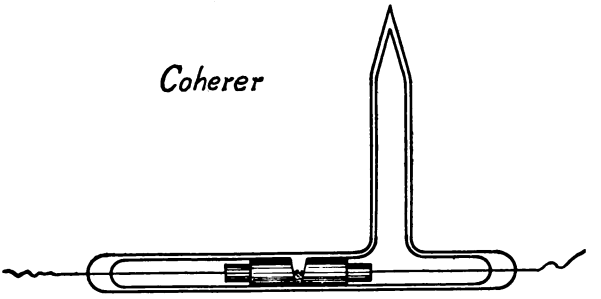

Fig. 4.

Digitized by Google

Improvements by Marconi.

Later Marconi, instead of employing a Hertz radiator, connected one terminal of the secondary of his induction coil to a ground wire and the other terminal to a metal plate suspended in air from a pole. The spark gap was placed directly across the secondary of the induction coil and adjusted to a length such that an oscillatory spark would pass between the electrodes of the gap. At the receiving end, an exact duplicate of the metal plate and ground wire was used, except that the Branly coherer was substituted for the spark gap at the sending end. His work was carried on systematically, and he quickly discovered that the higher the plates were placed in the air, the greater the distance away the Branly tubes would be affected by the waves. The greatest distance which this apparatus was made to work at that time, we are told, was about one and one-half miles.

It can be seen that were a sensitive relay used in place of the telephone at the receiving end, it could be made to close a local circuit containing a sounder and a battery. As soon as the resistance of the tube is lowered, the battery current will close the relay and on account of the lowered resistance of the filings in the tube, the relay will stay closed unless the tube is tapped with some light instrument, after which the filings will rearrange themselves in a loose mass, the resistance will be restored, and the relay circuit will be opened.

De-Coherers.

Marconi makes use of what he terms a tapper to automatically decohere or rearrange the filings so as to restore the high resistance after being affected by the wave. The general form of this apparatus is shown in Fig. 5 in which the circuit can be easily traced. The decoherer or tapper, as it is termed, consists of an electro-magnet having a vibrating armature like that in an electric bell, to which is attached a round brass knob on a stem. This arrangement is placed in such a position that as soon as the local circuit is closed by wave action, the tapper begins to vibrate and gently hit the coherer tube, thereby restoring the high resistance to the filings. However, as long as the waves are affecting the coherer, the resistance is kept lowered so that the relay circuit is closed during the whole time of the incoming wave.

Digitized by Google

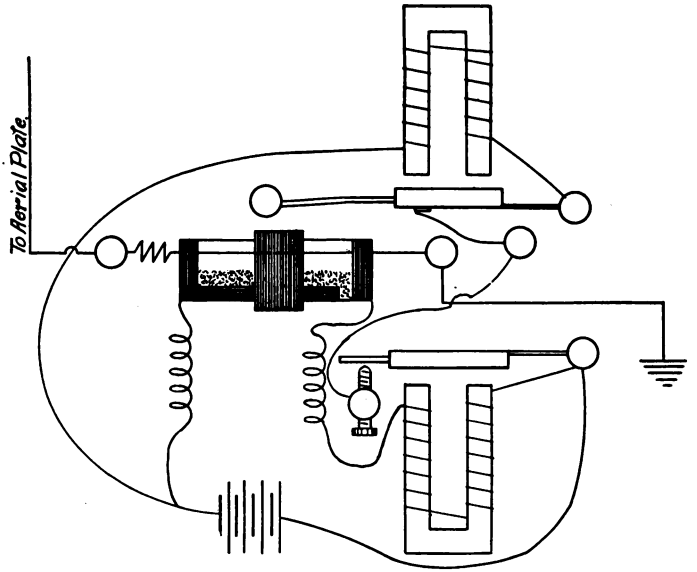

Fig. 5.

The action of this coherer is simply one of contact phenomena in as much as it is the close or loose contact of the metal filings which causes their change of conductivity.

Further Experiments of Marconi.

Fig. 6 shows the form of apparatus which Marconi used in 1896-97, and in the fall of the same year he experimented before the British Government Postal Telegraph Dept. and established a communication over a distance of two miles. This was followed

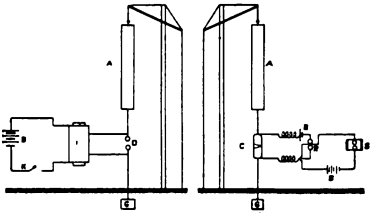

Fig. 6.

in 1898 by an increase in distance to twelve miles, using a ten inch induction coil to charge the antennae. Improvements were made in the coherers to such an extent that soon after the Marconi Wireless Telegraph Co., Limited, was organized.

Digitized by Google

Selectivity.

It was known from the time of the experiments that some means must be provided for making the transmission selective, so that more than two stations could hold communication at one time.

Plain Aerials and their Wave Lengths.

Marconi's first wave detecting device would respond to the signals from several stations at one time, and it was found that with an air wire (aerial) such as he used, which is termed a Plain Aerial, a receiving antennae of about four times the length of the transmitting antennae was necessary in order to obtain the most energy and consequently the strongest signals from the wave radiated by the signaling station.

Now the electrical length of a straight wire aerial is twice its natural length, so that from the above statements we can see that the length radiated from a plain aerial is about four times the natural length of the radiating aerial. Prof. Pierce states that the correct relation of l to L averages 4.19, where L is the length of the wave and l is the length of the radiating aerial, both in feet. Such an aerial possesses a capacity and some inductance, so that it has a natural period of vibration just as a circuit has which includes a Leyden jar, a few turns of wire and spark gap. On account of several things, one of which is the distribution of *capacity* of the aerial circuit, this period is somewhat variable and waves differing in length to quite an extent will affect it, thus producing interference, a fault which is one of the greatest difficulties presented for a successful system of wireless transmission of signals. Also, as the capacity of a plain aerial is small, to store any quantity of electricity upon it requires a very high potential, thus rendering unavoidable the use of long spark gaps. Long spark gaps are not an efficient means of transmission, as the resistance of the gap, which has been lowered after the passage of the first oscillation, rapidly rises, so that what energy is carried in the wave train radiated by such apparatus as is shown in Fig. 6 has to be in the first few oscillations, as they soon die out, making the oscillations exceedingly damped.

Inductively Connected Aerials.

Marconi originated an arrangement of apparatus which exchanged the plain aerial for one which was inductively coupled. In Fig. 7 the spark gap S was connected to the induction coil

Digitized by Google

secondary I, and from this connection was made to a condenser C, and a few turns of inductance L. Over L and near to it was a secondary inductance L^1, whose terminals were connected to an aerial and ground. These coils of mutual inductance are called an

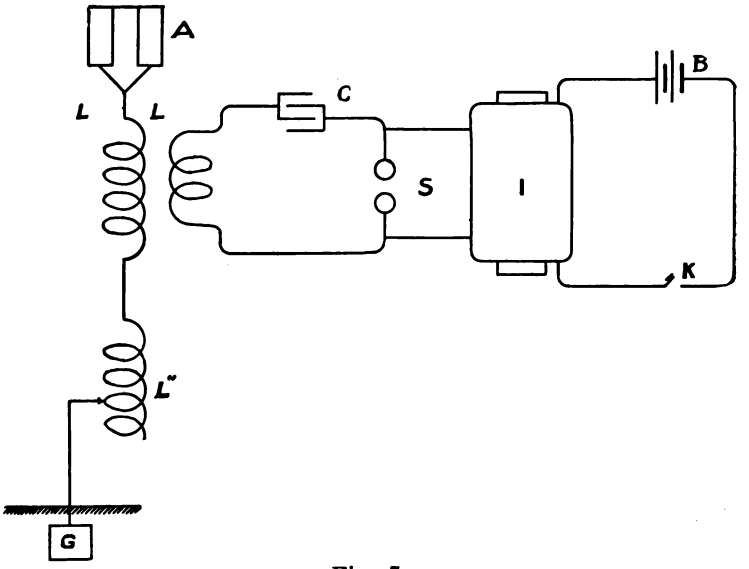

Fig. 7.

oscillation transformer. The working of the above transmitter is as follows: High tension current from the induction coil I charges the condenser C, which then discharges in an oscillatory manner across the spark gap S and through the coils of inductance L with a frequency depending upon the inductance of the coil and the size of the condenser. This high frequency current then induces an oscillatory current of the same frequency in the secondary inductance L^1, *if the open or aerial cicuit has the same period of oscillation as the closed or condenser circuit.* (Coupling influences the wave length resultant and this statement is strictly true only when the capacity of the antenna is very small when compared to the capacity of the condenser in the closed circuit.) The reason for this can be understood when we consider a boy in a swing, which is kept in motion by a push delivered by some person standing in a proper place back of the swing. If the impulses are delivered at the right time a very small amount of actual work expended in pushing will make the arc of the swing longer each time. But if, when the swing is in good motion to and fro, the person delivering

Digitized by Google

the impulses were to step forward to the vertical position of the swing at rest and deliver an impulse to the swinging boy, the result would be a heavy impact and the swinging motion would cease.

Thus if two electrical circuits are not in time with one another and, under these conditions an electrical impulse is delivered by the coil L of Fig. 7 to coil L_1 of the open circuit, the result will be a partial cessation of electrical swinging or oscillation and little energy will actually leave the aerial in the form of waves. Therefore the open and closed circuits of a wireless transmitter must be of the same electrical length and such a condition is termed resonance.

It was stated above that if two circuits of a wireless transmitter possessed the same period of oscillation, the currents induced upon the open or aerial circuit by the closed circuit would be of the same frequency as those upon the closed circuit. However, in order to transfer energy from the closed to the open circuit we must employ some kind of an alternating current transformer, as did Marconi and others, the coils of which would necessarily possess mutual induction. Now, mutual induction between two circuits sustaining electric oscillations changes the *effective* self-induction of each circuit. The natural period of a circuit in seconds equals $2\pi\sqrt{LC}$, and if L, the effective self-induction, is increased or decreased, the period of the circuit is varied in accordance. That is, we would have oscillations upon the antenna of different frequencies, the result of which would produce opposing forces at one time and at the next instant the forces would be combined and intensified.

As the wave length equals $\frac{V}{N}$, where V is the velocity of electro-magnetic waves and N the frequency, if there were two oscillations of different frequencies upon the antennae this would call for waves of two lengths, one longer and one shorter than the natural wave length of the circuit.

By use of a wave meter the periods of two inductively coupled circuits can be measured, and according to Pierce the length of waves radiated by two such circuits can be calculated by the following equations:

$$\lambda^1{}_1 = \sqrt{\frac{\lambda_1^2+\lambda_2^2+\sqrt{(\lambda_1^2-\lambda_2^2)^2+4\pi^2\lambda_1^2\lambda_2^2}}{2}}, \qquad (1)$$

Digitized by Google

$$\lambda^1{}_2 = \sqrt{\frac{\lambda_1{}^2 + \lambda_2{}^2 - \sqrt{(\lambda_1{}^2 - \lambda_2{}^2)^2 + 4\tau^2\lambda_1{}^2\lambda_2{}^2}}{2}}. \quad (2)$$

where λ_1 = natural wave length of the closed circuit alone,

λ_2 = natural wave length of the open circuit alone,

τ = coefficient of coupling obtained by solving the equation,

$$\tau = \sqrt{\frac{M^2}{L_1 L_2}} \quad (3)$$

where M = mutual induction between two circuits,

L_1 = self inductance of the closed circuit,

L_2 = self inductance of the open circuit,

and $\lambda^1{}_1$ and $\lambda^1{}_2$ are the wave lengths resultant from the coupling of the open and closed circuits when if considered as uncoupled would have equal periods, frequencies and wave lengths.

Prof. Pierce states that there is also a third wave length and gives the following reason: "After a certain number of oscillations the current in the condenser circuit becomes so small that the spark in this circuit extinguishes. This opens the primary[1] circuit and we no longer have a coupled circuit; so that the secondary[2] goes on oscillating with its own natural period."

However, if the capacity of the aerial with respect to the earth is small compared with the capacity of the condenser of the closed circuit, waves of only one wave length are radiated.

If the coupling is loose the mutual inductance between the two circuits is less and this would bring the waves nearer to the natural wave length of the circuit. Equality of wave lengths can never be obtained by loose-coupling however, as this condition would call for no mutual induction, consequently there would be no transfer of energy between the two circuits.

Resonance in Receiving Circuits.

The principles which govern the action of transmitting circuits also apply to receiving circuits and a plain aerial including some detecting device possesses the same disadvantages in receiving that it does in sending—namely, lack of selectivity and consequent loss of energy.

One of the first selective or tuned receiving circuits is shown in Fig. 8, which consists of the aerial A whose lead is attached to a sliding contact S, shown by the arrows on the coil of wire L, which is grounded at G. Another sliding contact S_1, is connected

1. Closed circuit. 2. Aerial or open circuit.

Digitized by Google

to a condenser C and thence to a detecting device D, from which a lead is taken to the ground G. The aerial, possessing capacity, is

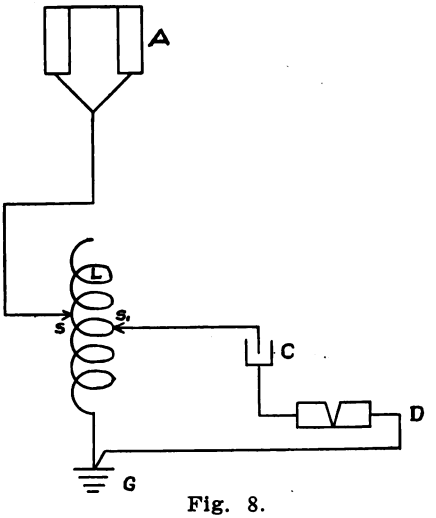

Fig. 8.

then in circuit with some inductance of the coil L and possesses a period of oscillation which may be varied by moving the sliding contacts S and thus varying the period of the circuit ASG. If accurately adjusted the length of waves to whose effect this circuit would respond could be calculated by the following formula:

$$\lambda = 2\pi \times V \times \sqrt{L \times C}$$

where V = Velocity of Electro-magnetic waves or 300,000,000 meters per second.

L = Inductance in Henrys.

C = Capacity of aerial in Farads.

The circuit S_1CDG is then tuned by varying the inductance by sliding contact S_1 until its period is the same as the circuit ASG, upon which the two circuits are in resonance and the current flowing upon the circuit ASG will induce a current upon S_1CDG with small loss because of their resonant features.

Efficiency of Coherers.

Mr. Marconi found that this sensitive tube or coherer with all of the possible improvements, failed to work satisfactorily beyond very limited distances, so that it soon became necessary to employ other detecting devices. Progress on this line of work has been made by a number of persons and is described in the next chapter.

Digitized by Google

CHAPTER IX.

Detectors.

A very great error exists in the minds of some students of Wireless Telegraphy in thinking that the instruments in use for the purpose of detecting wireless signals are more sensitive than the ordinary current detecting devices, such as galvanometers, telephone receivers, relays and the like.

In the use of a sensitive relay, with the spring set at such a tension as to make the instrument reliable, it requires about one one-hundredth to two one-hundredths volts to trip the armature. We often have E. M. F.s of this extent in wireless, but by experiment we find that relays will not operate. Galvanometers will detect currents of much less strength than are sometimes used in receiving signals. One of the most sensitive detectors of currents which we have are specially constructed telephone receivers, wound with many turns of very fine wire. We must then look to other causes for the inadaptability of such current detecting devices as are mentioned above for wireless use.

First, we are handling currents which are of a very great frequency; neither a relay armature nor a telephone diaphragm will respond to vibrations as rapid as are used in wireless telegraphy. Even were it possible to construct an instrument mechanically able to respond to the oscillations, were we to use windings of such a size as to make it sensitive, it would doubtless have an inductance so large that the counter E. M. Fs. produced would allow little current to flow on its coils. This is the case on a high wound relay or receiver. Galvanometers which are sensitive have altogether too slow a period to respond to these oscillations if connected directly or inductively in the aerial circuit, although some galvanometers will show deflections when the voltage is less than one-millionth. It is then apparent that we must employ an instrument which will use the energy of the *whole wave train* and in this manner detect the number of wave trains in one signal by means of some sensitive current detecting instrument. It is for this purpose that detectors are used in connection with a telephone receiver or a recording device.

Digitized by Google

No attempt will be made here to describe the galvanometers which can be employed in connection with a detector for recording signals, but they have been used in some cases, and are a standard means of measuring the intensity of signals.

Telephone Receivers.

Telephone receivers are of many different kinds and makes, some wound to a very high resistance of perhaps 8000 Ohms, and some as low as 100 Ohms. The resistance of a telephone is not a measurement of its reliability or sensitiveness, as like any other magnet, it is the ampere turns which should really concern us, as a high resistance means small currents. However, Dr. A. W. Austin has measured the volt sensitiveness of a pair of 800 Ohm telephones of a certain make, and finds that the sensitiveness increased visibly with the frequency of the E. M. F. employed.

A table taken from a paper by Dr. Austin is given below.

No. of cycles per second	Volts to produce audible sound in phones.
60	.00062
120	.00029
180	.00017
300	.00006
420	.000017
540	.000008
660	.000003
780	.0000011
900	.0000006

Although this table was not derived from experiments made with oscillatory currents, such as are used wirelessly, an examination of the table cannot help but convince one that much less power could be used at a higher spark frequency to work the usual distance, than is necessary at the frequency generally used, 60 cycles.

Among the most reliable makes of receivers which the author has had the opportunity of testing are the Brandes, Murdock, and Holtzer-Cabot. Mr. Greenleaf W. Pickard, Consulting Engineer of the Wireless Specialty Co., has invented a telephone receiver for wireless use which has the advantage of being equipped with adjustable magnets. This type of receiver should meet with universal approval, as this gives a great flexibility of fixed tuning, as one magnet may be set at such a degree of proximity to the diaphragm as to make only a certain strength of signal discernible,

Digitized by Google

while the other side of the head set might be adjusted to any certain sensitiveness.

Coherers.

Coherers have been described in a preceding chapter, and their efficiency was limited, is limited and will continue to be, so that further consideration of them is useless.

The types of detectors in general use at the present time can be divided into four classes:

Crystal Rectifiers
Electrolytic Detectors
Magnetic Detectors
Audion Detectors.

The foremost in the list is the most common, and as far as the author is able to ascertain, the most generally used.

Crystal Rectifiers.

Certain substances, when brought into very loose contact, possess the property of rectifying, or partially recitfying alternating currents into pulsating direct currents. The exact cause of this action is as yet unknown. Among the substances used as crystal rectifiers are Carborundum, Silicon, and Molybdenite in contact with steel or brass; Perikon, which consists of crystals of chalcopyrites and zincite in loose contact; Pyron, which consists of Iron Pyrites in loose contact with a point like the silicon detector, and several other minerals which are of less sensitiveness than those named and are seldom used, therefore will not be discussed.

The Silicon, Perikon, and Molybdenite detectors are inventions of Mr. G. W. Pickard, of Amesbury, Mass. The advent of these detectors filled a long felt desire, and are the most sensitive of any of the crystal rectifying detectors now known.

The carborundum detector is a conception of General Dunwoody and is now the property of the United Wireless Tel. Co., and is used exclusively by that company.

The Carborundum Detector.

This detector, see Fig. 1, as used by the United Wireless Tel. Co., consists of a standard capable of sustaining a crystal of the mineral between a contact of carbon and a brass point. The sensitiveness of this detector may be increased by embedding a large portion of the crystal in a cup containing solder, and although it

Digitized by Google

ranks below the Perikon and Silicon detectors in susceptibility to oscillations, the fact that it is not as easily rendered useless by

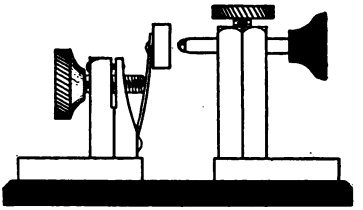

Fig. 1.

heavy static disturbances or induced currents, always more or less present in any wireless station of power, makes adjusting of the crystal point contact less frequent and therefore faster work is possible. However, there are several ways to isolate a more sensitive silicon detector, so that with certain types of instruments, this defect of a silicon detector is easily remedied. Application of a small battery current to the crystal contact increases the efficiency of this detector greatly, and such means are provided for in the tuning apparatus which will be described later. Carborundum crystals need have the battery current flowing through them in a certain direction, and as this direction cannot always be told by the appearance of the crystal even to experienced operators, a polechanger in the battery circuit greatly increases the ease with which this detector can be handled.

For a very thorough treatise upon the carborundum detector the reader is referred to the "Principles of Wireless Telegraphy", by Prof. Pierce.

The Silicon Detector.

Fig. 2 shows a type of a Silicon detector, such as can be purchased of Wm. J. Murdock & Co. of Chelsa, Mass. In construction it consists of a base of hard rubber, upon which is placed a conducting plate to which is wired one of the binding posts. The other electrode consists of an adjustable point which presses very lightly on a crystal of silicon placed upon the conducting plate below. Very loose contact is thus secured, which is a necessity in this detector. Burn outs from heavy induced currents are almost inevitable, unless means are taken to cut the detector entirely out of the circuit when sending. This may be accomplished by using a double pole switch and making the leads from the switch to the detector as short as possible. The switch should be opened

Digitized by Google

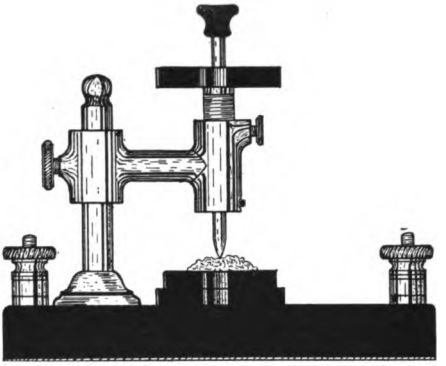

Fig. 2.

when sending. After long usage, silicon becomes less sensitive, due in a great extent to the accumulation of grease and dirt upon its surface. This may be removed successfully by washing the crystal with Carbon Disulphide, and afterward with soap and water, and thoroughly drying. Also, from continued burnouts, the obtainable points of good contact may become charred, thus necessitating chipping off the outside of the crystal to obtain new points. Although there may not be a great quantity of extremely sensitive points upon one piece of this mineral, it ranks above the Carborundum in sensitiveness, and next to the Perikon.

The Perikon Detector.

A cut of the Perikon Detector is shown in Fig. 3 as manufactured and sold by the Wireless Specialty Apparatus Company of New York.

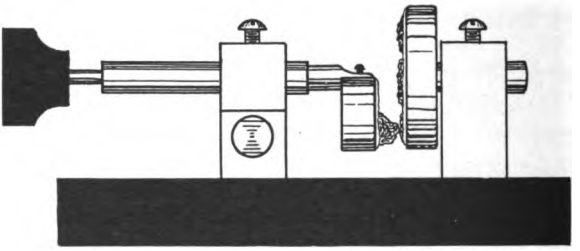

Fig. 3.

It consists of a rubber base, upon which is held a cup containing crystals of zincite, perhaps seven or eight in number, depending upon their size. To an adjustable arm is mounted a cup containing a crystal of chalcopyrite. A spring regulates the pressure between the two crystals in use, and it is found that too great

Digitized by Google

a pressure lowers the sensitiveness in a marked degree. Like the silicon detector, no two points are alike, some being better than others. The movable arm must then be adjusted until a sensitive point is found. The crystals can be cleaned in the same manner as those of the silicon detector. This is one of the most, if not the most sensitive detector known. Perhaps its greatest faults are susceptibility to burn outs, the remedy being the same as for the silicon; jarring out of adjustment, a remedy for which is placing the detector stand upon felt, or some other shock absorber; loss of sensitiveness, which occurs after about six months use, the only remedy being to obtain a set of new crystals. It is claimed by some that after continued use, the crystals of carborundum, silicon, or of the Perikon detector become "polarized," but the author has seen no proof of such an action, and contends that such a condition cannot exist for lack of any possible polarizing properties.

The Molybdenite Detector.

Molybdenite, as used as a detecting mineral, has the appearance of thin sheets of lead, placed together in layers in the same manner as mica is found in mines.

In sensitiveness, it is about the same as the Carborundum, when a battery is used with the latter. Some companies who have the mineral molybdenite for sale, claim that it will stand hard usage without the annoying property of burning out, but evidence of such performance is lacking, although there are some crystals of any mineral detector which seem to stand up under most any conditions, and hold their adjustment almost indefinitely. However, these are rare, and when a crystal possessing these rare qualities is found, it should be used carefully, so as to avoid chipping off of the sensitive points.

Any detector stand which has an adjustable point can be employed for the purpose of holding the molybdenite, but by electroplating one side of the sheets of this mineral, it can be readily soldered to, and this action will materially increase its efficiency.

The Action of Crystal Rectifying Detectors.

The construction of detectors as classed above has been described and some of their valuable features spoken of, in addition to a few of their faults. The latest accepted theory of why a mineral possessing rectifying properties for alternating currents acts as a detector of Hertzian waves follows:

Digitized by Google

First, it will be recalled that waves of ether, as applied to wireless transmission, when striking an aerial conductor, produce on it alternating currents of very high frequency, and that they are intermittent. That is, the wave is of a damped character. Also, that the E. M. F. produced by an oscillation consists of forces which are successively opposed to each other. We may consider that there is first an E. M. F. produced by the wave which first charges the antenna from the ground up, then upon the next alternation, charges it from the antenna down.

Reference is made to Fig. 4. This constitutes what is called a plain aerial, which for the purpose of illustration, suits the purpose better than a more complicated one.

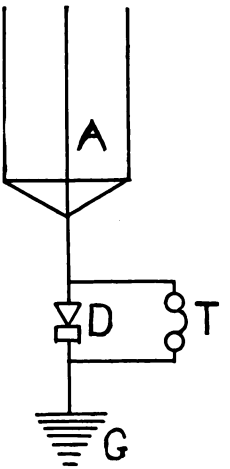

Fig. 4.

A represents an aerial, T the telephone receivers connected in shunt about the detector, D, from which a lead is taken to the earth at G.

Suppose that the rectifying detector D, which we will name silicon, is connected in the circuit so that current can flow through it *up;* and that a wave strikes the receiving circuit setting up an E. M. F. which produces a flow of current through the detector, charging the aerial. (See author's article, "The Function of Crystal Rectifiers," Telegraph and Telephone Age, Vol. 14, No. 6). Now, when the opposite forces in the wave set up an E. M. F. which would naturally produce a flow of current *down* the aerial, the rectifying property of the silicon is brought into play, and a large portion of the charge is obliged to remain upon the

Digitized by Google

aerial for a short time because of its inability to flow through the silicon. As the train of waves contains more than one oscillation, the effect of the wave train is to accumulate a charge upon the aerial, which escapes to the ground through the telephones shunted about the detector D, and causes the electro-magnets to exert a magnetic pull upon the diaphragm, making it move and producing a sound therefrom. It is apparent that the number of sounds thus produced will depend upon the number of trains of waves arriving at the aerial, and that we hear only the movement of the diaphragm whose movement, as stated, corresponds to the whole number of wave *trains.*

The whole action may be stated as follows: A 60 cycle current at the transmitting station is charging a condenser whose oscillatory discharge through a spark gap induces an oscillatory current in an aerial by induction (by means of a helix or oscillation transformer). This aerial sends out a train of waves, alternating in character, and of decreasing amplitude. Upon striking an aerial, these waves arriving one after another, set up currents alternatingly flowing up, then down, the aerial. The detector, which is in reality a rectifier of alternating currents, will only permit the current to flow in a certain direction, either down the aerial or the opposite way, consequently there accumulates upon the aerial a charge of electricity, which escapes through the shunted telephone receivers making one movement of the diaphragm for the whole wave train. The number of clicks then which we hear in the receivers corresponds exactly to the number of times the condenser at the sending station is completely discharged. This must not be confused with the number of times the charges oscillate during one discharge, as this latter is at a frequency which it would be impossible to hear by means of any instrument known at the present time. Perhaps it would be more correct to say that the number of clicks heard in the receivers corresponds to the number of times the current upon the secondary of the transformer *charges* the sending condenser.

Although this explanation is simple as applied to plain aerials and rectifying detectors, adding inductance to the circuit or inducing currents in the secondary of a loosely coupled tuning coil may seem to complicate the matter, but the explanation is as valid for one as for the others and is easily understood if one remembers that two mutually inductive circuits react upon one another.

Note.—It must not be understood that the current produced

Digitized by Google

by the incoming wave always flows first *up* the aerial, as this depends upon the polarity to which the sending condenser is first charged.

The Electrolytic Detector.

Some of the early wireless investigators have filed patents for detectors which consist in some form or other of a fine wire dipping

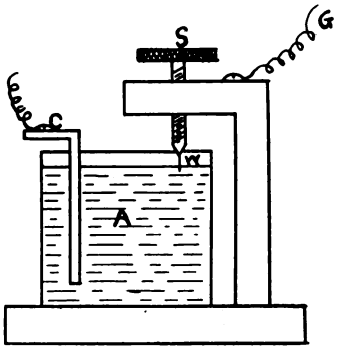

Fig. 5.

into an electrolyte of commonly some acid, and a conducting metal immersed in the acid solution for the other electrode. One of the earliest schemes for this type of detector is given in Fig. 5. A vessel is partly filled with a solution of one-fifth nitric acid and four-fifths water. Into the solution is immersed a carbon plate C, to which is connected one wire from the tuning coil or aerial. By means of the set screw S to the bottom of which is attached a fine platinum wire, contact with the solution A is made. The platinum wire must be very small and must only just touch the liquid. The wire G is taken to the ground connection. This form of instrument was originally conceived of by Fessenden, and patented by him in 1903, and was termed a Barreter. We will class it here as one of the forms of Electrolytic Detectors.

Since that time the Electrolytic detector has been improved in form and is still in use in a great many Government stations. An electrolytic detector as sold by the Electro Importing Co. of New York is shown in Fig. 6.

It consists of a hard rubber base upon which is mounted a standard B, which holds a thumb screw arrangement for lowering a very small platinum wire into a carbon cup containing a 20% solution of nitric acid. This fine platinum wire is called Wollaston wire, and is made by drawing out a silver coated platinum wire until its diameter is about 0.0001 inch. The cup

Digitized by Google

containing acid must in all cases be constructed of material which will not be acted upon by acid, and possess other qualities in some

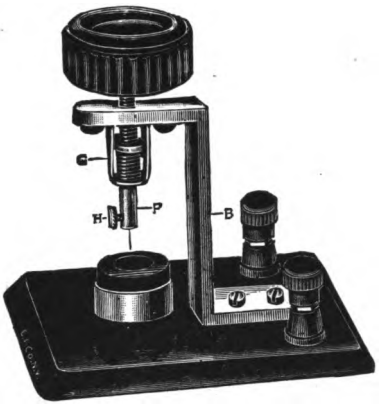

Fig. 6.

types of electrolytic detectors which will be spoken of later. As the sensitiveness of this instrument as a detector depends entirely upon the adjustment of the wire in the solution, great care must be taken that the wire just touch the surface of the electrolyte.

Regarding the efficiency of the electrolytic detector the author has made many tests and has found the ordinary type of electrolytic detector to be far inferior to a mineral detector such as carborundum in commercial efficiency. It is, of course, very sensitive when assisted by a small external E. M. F. of about 0.2 volts, but is subject to burnouts and any small jar will knock it out of adjustment. It requires great patience to get it in adjustment and the acid used as an electrolyte if spilled on one's clothes will ruin the cloth. In fact, the ordinary electrolytic detector is not worthy of consideration for commercial purposes.

Attention is called to Fig. 6A, which shows an electrolytic detector manufactured by the Standard Wireless Equipment Co. This detector consists of a Wollaston wire attached to a micrometer screw arranged so that by turning the hard rubber nut on the top of the detector stand, the Wollaston wire can be raised from or lowered into the electrolyte contained in a small hard rubber cup. This cup also contains the other electrode of the detector and is of such dimensions and so constructed that jarring the instrument will not knock it out of adjustment. A potentiometer, rheostat and battery are contained in a very neat case whose top is of hard rubber and supports the

Digitized by Google

detector stand proper, which is constructed of the same material.

This instrument possesses several valuable features. First, it is very sensitive; second it will not jar out of adjustment; third the Wollaston wire and rubber cup are *inside* the detector stand, which feature eliminates the annoyance experienced in breaking off the Wollaston wire and in breathing acid fumes; fourth, the detector will work if turned upside down; fifth, it is very easily adjusted and requires very little adjustment; sixth,

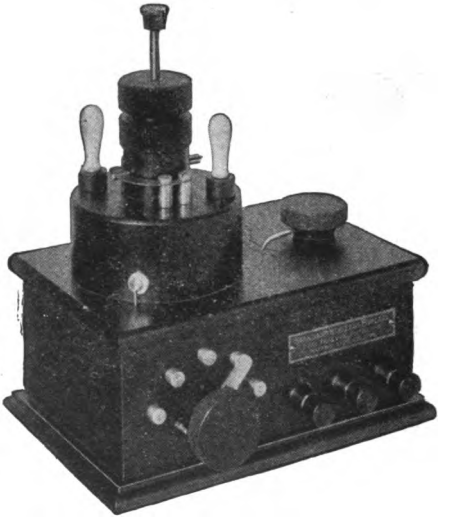

Fig. 6A.

atmospheric electrical discharges (static) are not as disturbing as with other types of detectors. The author had the opportunity of testing one of the first of the instruments placed upon the market and the results obtained were satisfactory in every respect. In fact, every statement made by the manufacturing company in their guarantee was found to be absolutely accurate and reliable. The instrument is neat and compact, will stand rough usage, requires very little care and should last for years. Its high commercial efficiency can not be doubted.

Theory of the Action of an Electrolytic Detector.

When the electrolytic detector was first used, several explanations of its actions were attempted, one inventor stating that the action was a thermal one, another that the action as a detector depended entirely upon the fact that platinum in an acid solution with carbon or some other metal suited for the purpose constitutes

Digitized by Google

a small electrolytic cell which quickly "polarizes" and which polarization is stopped by the effect of the wave causing a small current to flow through the telephone receivers. For several reasons these explanations seem inadequate, and Prof. Pierce, acting upon the theory explained by Prof. Pupin made experiments whose results coincide with those of Prof. Pupin and prove that "an electrolytic cell with one of the electrodes small, when suitably polarized with a direct current, is a rectifier for alternating currents".* The direct current is, of course, supplied by a small cell or group of cells. There are several points however, in which its action differs from that of crystal rectifiers. In the action of polarizing, there seems to be a small quantity of bubbles of gas about one of the electrodes, and this undoubtedly forms the dielectric of a small condenser whose plates are the electrodes of the detector. Exactly what effect this small capacity has upon the detector's action is again described by Prof. Pierce: "The polarization capacity of the small platinum electrode is not entirely negligible,.....but it may, however, aid in producing a rectified current as well as in opposing this effect, and apart from the effect of this capacity on the tuning of the circuit, (which point will be dealt with later in this book), does not detract from the utility of the rectifier as a detector of electric waves."

Magnetic Detectors.

Although this type of detector of electric waves was known before 1902, we must credit Mr. Marconi with the invention of a magnetic detector which is of commercial value.

The action of the magnetic detector depends upon the fact that electric oscillations taking place on a coil of wire within which is placed an iron core made up of small iron wires, tend to annul or partially annul the magnetic hystersis of the iron core.

Fig. 7 shows a form of Marconi magnetic detector. A core, consisting of small iron wires, supports a winding of small insulated copper wire in one or two layers. This winding we will term the primary winding, and over it a secondary winding consisting of a large number of turns of fine copper wire is wrapped.

*Note.—From "Principles of Wireless Telegraphy." For a detailed explanation of the action of the electrolytic detector the reader is referred to the above treatise by G. W. Pierce. Chapter XIX.

Digitized by Google

The primary winding in practice is connected to the aerial and ground, while the secondary is connected to the telephone receiver. Above the ends of the core is placed a permanent horseshoe magnet, which can be rotated slowly by means of clockwork. If the primary coil is traversed by a train of oscillations, the magnetic field surrounding the iron core is suddenly changed, producing a current in the secondary winding which produces a movement of the telephone diaphragm.

After many experiments, Marconi found it more convenient

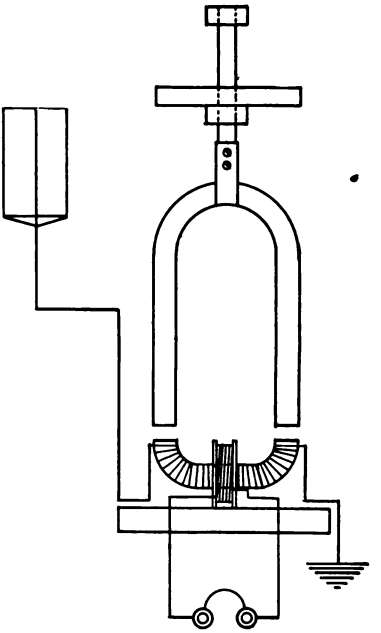

Fig. 7.

to move the iron core than to move the permanent magnet. An arrangement which utilizes this convenience is shown in Fig. 8. In this form the detector consists of two wooden wheels, A and A, whose edges are grooved and which are turned slowly by clockwork. A continuous semi-flexible core, C, of thin silk covered iron wire acts as a belt for these two wheels and runs in their grooves. The speed of this core of iron wire should be about two or three inches per second. The flexible core passes through a glass tube, over which is wound a coil of insulated copper wire, P, the primary, and over this primary is wound the secondary, S, which is connected to the telephones, T. For best results the resistance of the

Digitized by Google

secondary winding should, it is said, be about the same as the resistance of the telephones. Directly over the secondary are placed two permanent horseshoe magnets, M, with their similar poles together and arranged as in Fig. 8.

When the iron core is slowly moved forward by the clockwork mechanism, that part of the band directly under the poles S and N of the permanent magnets becomes magnetized, but owing to the residual magnetism the magnetized portion slips slightly along forward as the core moves in that direction. That is, the magnetism, induced in the iron core from the permanent magnets would, perhaps cover in a space two inches in length on the core if

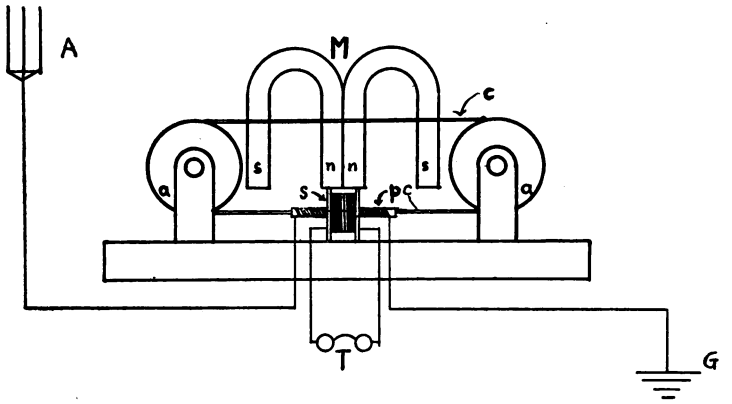

Fig. 8.

it were at rest. But owing to the motion of the core, this space is moved perhaps a fraction of an inch forward. This is due to the fact that the core cannot become demagnetized at once. If oscillations pass through the primary coil P they annul this magnetic retentivity, and the magnetized portion suddenly slips back into a position which it would assume if the core were not in motion. This action of slipping back is equivalent to the moving of a magnetic field through a conductor, the latter in this case being the secondary (S) winding of the detector. Thus a current is generated in the secondary coil, and manifests itself in the telephones.

Although this detector is used mostly by the Marconi Companies, were it as sensitive as the crystal rectifiers, its commercial efficiency would be very high, as it is very easy to adjust, stays in adjustment, and is not subject to that annoyance, 'burnouts'', which is common to nearly all other forms of detectors.

Digitized by Google

Audion Detectors or Oscillation Valves.

This form of detectors is known under many different names. Prof. Fleming calls them oscillation valves; Deforest, audion de-

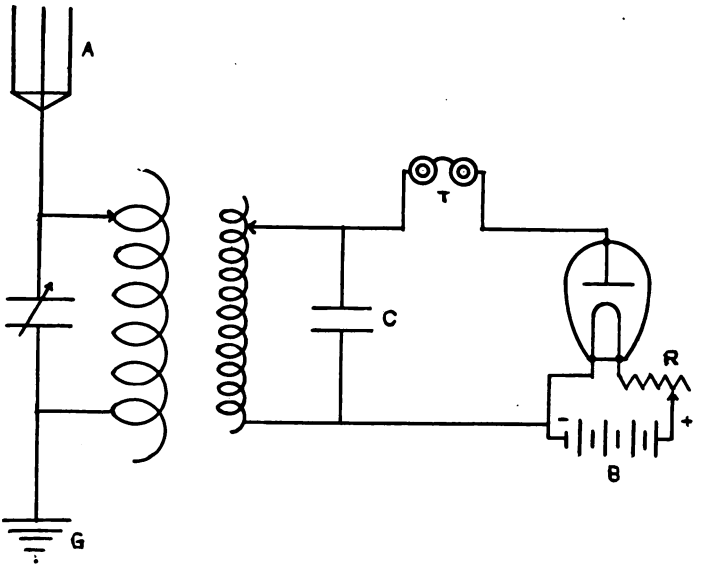

Fig. 9.

tectors; and some others, vacuum detectors. A form of the Fleming oscillation valve and the receiving circuit with which it is used is shown in Fig. 9. In actual practice, its appearance is not unlike a small electric light bulb. A cut of it is shown in Fig. 10, as manufactured and sold by the Marconi Wireless Tel. Co.

Another circuit for the Fleming oscillation valve which is said to be used by the Marconi Wireless Tel. Co. is given in Fig. 16, Chapter X. The diagram is self-explanatory.

The action of a Fleming oscillation valve is that of an oscillation rectifier. It is a well known fact that carbon heated to a very high degree liberates point charges of negative electricity. Therefore, the carbon filament of an incandescent lamp is discharging from the filament negative electricity. Now if an incandescent electric lamp has a metal plate included in the glass bulb, contact being secured to this from the outside by a platinum wire sealed in the glass and attached to the metal plate, and if another circuit is made outside the lamp which connects the negative terminal of the filament over which direct current is passing to the metal plate inside the lamp, if electric oscillations are set up in the

Digitized by Google

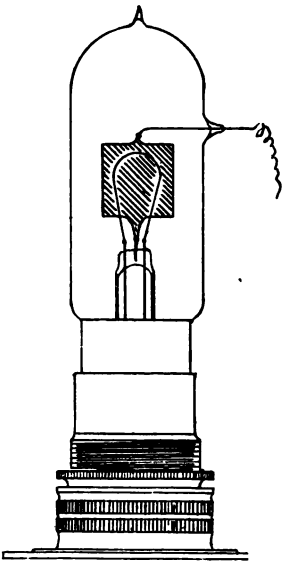

Fig. 10.

outer circuit, negative electricity can flow freely through this circuit from the incandescent filament inside the bulb, but not from the plate to the filament on account of the repulsion of like charges. Hence, if the incandescent lamp with the enclosed metal plate be connected in a circuit as shown in Fig. 9, the oscillations in the tuned circuit of the receiver including the secondary of the tuning coil, condenser, and lamp—which in reality when equipped in this manner with a metal plate is a Fleming oscillation valve—oscillations will be rectified and the telephone diaphragm will respond to the rectified currents.

Another circuit which Marconi employs in connection with the oscillation valve is shown in Fig. 11. Here the secondary of a receiving oscillation transformer is in circuit with an oscillation valve O. As is shown at I, the telephones are connected to the primary or low resistance winding of a ten inch spark coil, and the secondary or high resistance winding is in the circuit to the tuner. After being tuned, oscillations will occur on the antennae circuit due to the arrival and passing of electro-magnetic waves, are induced upon the secondary circuit, rectified by the oscillation valve, flow upon the secondary of the spark coil as pulsations of direct current, which are transformed into currents of much larger

Digitized by Google

strength but less E. M. F. by the spark coil, and produce a movement of the diaphragm of the low resistance telephone T.

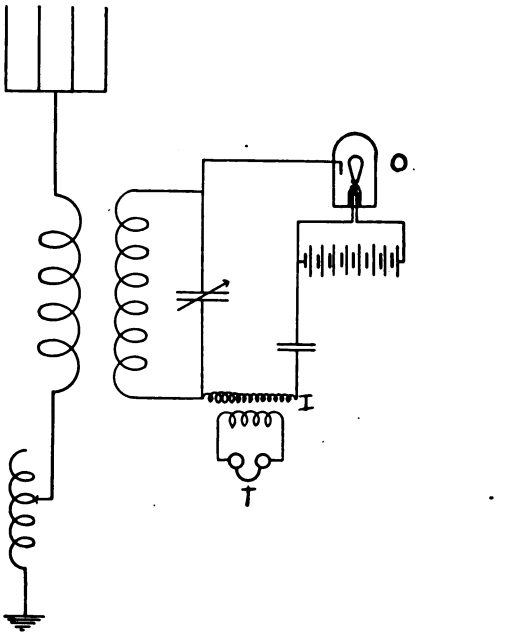

Fig. 11.

This arrangement makes one of the most sensitive receivers yet employed in wireless telegraphy. The only objection is the short life of the filament. Dr. Fleming states that owing to the fact that a Tungsten filament is a greater radiator of electrons than carbon the substitution of a Tungsten filament greatly increases the efficiency of the valve as a radiator, besides lengthening the life of the filament.

There are several other forms of apparatus which have been used for wave detectors, but those described here are the types most commonly employed by commercial wireless companies, and no attempt has been made to describe any particular method of construction, as there are several books which have been written upon the construction of amateur wireless equipment. However, the author has found that the best obtainable is always the cheaper in the long run, so would advise the purchase outright of any particular piece of apparatus desired, and of a reliable company, keeping in mind that a cheap instrument will never give a real test of that particular type's efficiency.

Digitized by Google

CHAPTER X.

Receiving Circuits and Tuning Apparatus.

In dealing with all types and forms of receiving apparatus which are used in wireless telegraphy, it must be kept in mind that the object of all tuning apparatus is the same. This is to furnish means by which the electrical charges upon the aerial and its connections at the receiving station can be made to vibrate in the same period as the charges upon the aerial at the sending station. That is, we must furnish means by which the wave length of the receiving instruments can be lengthened or shortened to suit the length desired, and this would naturally be the length of a wave radiated by some station with which we wish to communicate.

Aerials, or antennae, can be divided into several classes with regard to the manner in which their periods of vibration are changed. First there is the Plain Aerial, which consists of aerial conductors connected to a detector and then to ground or earth. A Plain Aerial has no coils of inductance in the circuit, and is, in reality, possessed of only one period of vibration. To some the question will arise, why is it necessary to change this period at all? This can be understood by an examination of the definition of the word period, as applied to wireless. *Period is the time consumed by the execution of a complete vibration or movement back and forth of a charge of electricity.* Now frequency is defined as the number of cycles per second, and as one complete movement back and forth constitutes a cycle, the relation between frequency and period is apparent, as the number of cycles or frequency depends directly upon the time consumed by one movement back and forth, which latter is one period. We have seen that the frequency of a circuit is dependent upon the square root of the product of the inductance and the capacity of the circuit, or

$$N = \frac{1}{2\pi\sqrt{LC}},$$

and as the wave-length is equal to the velocity of magnetic waves divided by the frequency of the circuit, and the period of any electrical circuit is equal to the unit time or 1 divided by the fre-

Digitized by Google

quency, we have a direct relation between the different factors and they are, as said, dependent upon one another.

Providing that electro-magnetic waves were all of one length, the plain aerial with its detector would be a very convenient one to use, as it would require no tuning device and the latter's accessories. However, the electro-magnetic waves are not all of the same length, as has been amply proven elsewhere. As an illustration of this fact, we have the story that two experimenters were using apparatus, situated on opposite sides of a wide river, consisting of plain aerials supported by telephone poles. The receiver noticed that the signals were at first very weak, which fact he primarily attributed to his crude instruments. After much experimenting, he decided to lengthen his aerial, and did so, noticing that apparently the longer the aerial, the stronger the signals. After reaching at last a length of receiving aerial which was four times that of the sending aerial his signals were of a maximum strength. He found also that as he increased the length beyond four times that of the transmitting side, the signals began to decrease in intensity. It is apparent that this manner of adjusting the period of the aerial was a very inconvenient one, so, remembering that coiling a wire increases its self-induction and consequently

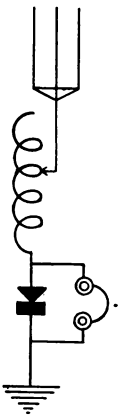

Fig. 1.

its electrical length, the experimenter provided himself with what is now termed a tuning coil, which consisted of a number of turns of wire wound upon an insulated core of some non-magnetic material with an arrangement by which he could cut in any number of turns of the coil at will. This arrangement eliminated the an-

Digitized by Google

noyance of having to stretch different lengths of wire upon his aerial poles, and the whole apparatus was connected as in Fig. 1.

The circuit contains inductance present in the coil of wire, and capacity, which is the capacity of the aerial. This includes all things necessary for a high frequency circuit. As the capacity of the aerial with respect to the ground remains very nearly constant, any change of inductance would make a corresponding change of the wave length of the circuit.

The type of aerial illustrated in Fig. 1 is termed a *Directly Connected Aerial.* This type of receiving circuit is not an efficient arrangement, and is very little used.

A more efficient form is illustrated in Fig. 2, which is termed an *Inductively Coupled Type.* Change of frequency is effected by varying the amount of inductance in the open circuit comprising the aerial, tuning coil primary, and ground lead, this primary in-

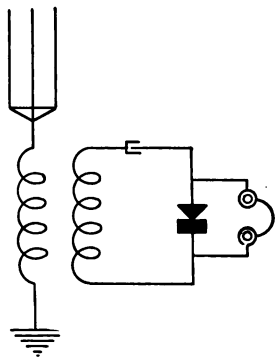

Fig. 2.

ducing currents into a secondary winding whose period is regulated by change of inductance, the capacity remaining fixed. It is immaterial whether the capacity or the inductance in the circuit be altered as the result of varying either will be a different frequency for the circuit. The frequency might be kept the same by lessening the inductance and increasing the capacity correspondingly.

Types of Circuits.

Receiving circuits are termed Marconi, DeForest, Stone, Massey, Slaby-Arco, etc., but these names are misleading, as in a great number of cases the circuits were not conceived of by the person after whom they are named. However, for lack of a better name, that they may be distinguished from one another, the circuits de-

Digitized by Google

scribed on a following page will be known as they are generally known in other text books.

The question is often asked, why is a detector placed as it is in a directly connected aerial, (in series with the aerial), not more often used, as this would eliminate a quantity of apparatus. The reason this form of receiving circuit does not respond readily to weak signals and therefore is not extensively used, is that the detector itself absorbs a certain amount of energy, and if placed directly in the aerial circuit, would greatly increase the resistance of that circuit, and therefore the available energy would be nearly all consumed in overcoming the resistance of the detector. How-

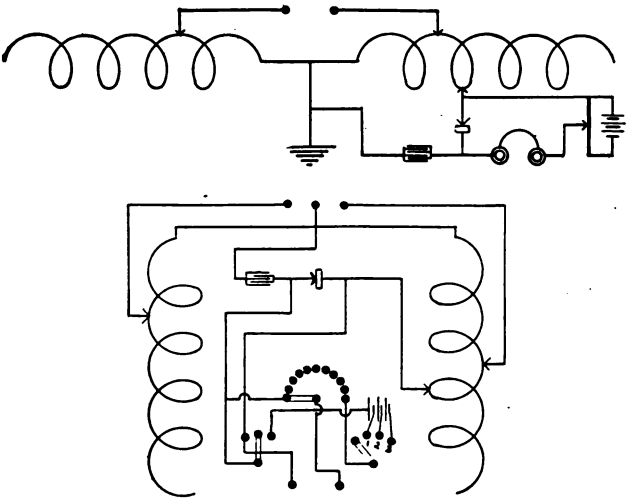

Fig. 3.

ever, if the wave train desired to be received is of a highly damped character, this form of circuit would be most efficient. In practice it is found that the strongest signals are obtained when the detector only receives a small fraction of the total energy so that it is placed in a circuit such as described in a loose coupler tuning coil.

Fig. 3 illustrates the manner in which the "Type D" tuning apparatus of the United Wireless Tel. Co., is connected. The general form of such a tuner is shown in Fig. 8. In practice the tuning is accomplished by moving the sliders of the two coils until resonance is obtained. It should be noticed that the aerial is of the "Loop" type and that both coils are grounded. The fixed condenser is sometimes placed in the lead from the detector to the

Digitized by Google

tuning coil slider and sometimes between the detector and the ground. A carborundum detector is provided with the tuner and three dry cells are used for local detector circuit. The potentiometer is composed of resistance steps constructed of carbon blocks which have the advantage of being non-inductive and therefore varying the detector current does not affect the tuning.

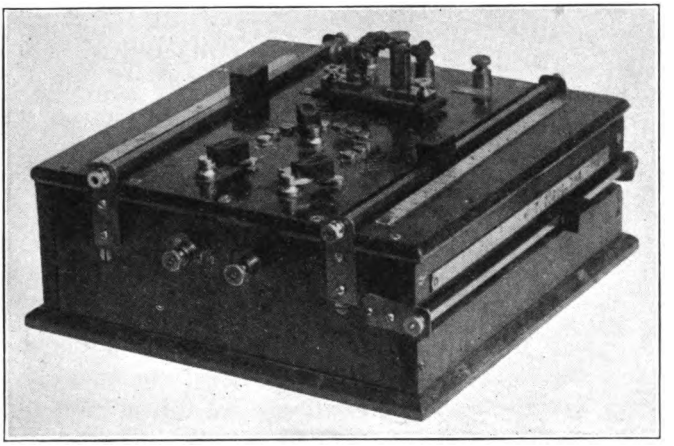

Fig. 3A.

On the left hand lower corner a small switch is represented which when thrown to the extreme left, shunts the detector with a large wire. This shunt is used when the transmitter is in operation and when thrown to the left allows only a very small portion of the heavy induced currents present in the tuner to go through the detector, thus preserving the sensitive adjustment of the latter instrument. When the shunt switch is placed upon the middle point of the three contacts, the telephones are in circuit for receiving, but the battery is cut out of the detector circuit. When upon the right hand point of the three contacts, battery current will flow through the detector. Carborundum used for detector purposes usually works best with a small external E. M. F. applied to it, so when receiving with carborundum throw the shunt switch to the right and when sending, to the left. Fig. 3A shows the appearance of the tuner.

Fig. 4 illustrates the connections of the "Type E" tuner of the U. W. T. Co. This apparatus consists of a loose coupler receiving transformer, the degree of coupling of the primary and secondary being varied by moving the secondary out of the pri-

Digitized by Google

mary, means being provided for this action. A sliding contact varies the amount of primary inductance in circuit with the aerial, while the secondary coil is provided with a number of contact points for varying the secondary inductance in steps. As there might be a point of adjustment desired perhaps halfway between

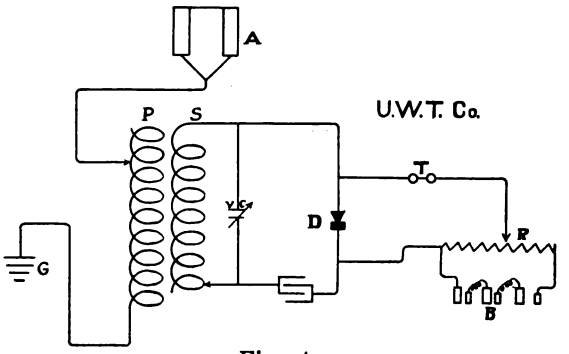

Fig. 4.

any two of the points, a small variable condenser is placed in the set which is supposed to assist in tuning the secondary circuit. As in the Type D tuner, a carbon resistance potentiometer is provided and a battery of three dry cells. The detector shunt of the Type D is embodied in a pole changing switch in the Type E whose purpose is to change at will the direction of the battery current through the detector and when the pointer of the pole changing switch is moved to zero, it opens the detector circuit, so that its adjustment will not be ruined when using the transmitting apparatus, the induced currents from which otherwise generally burn out the carborundum or other crystal, necessitating readjustment. On

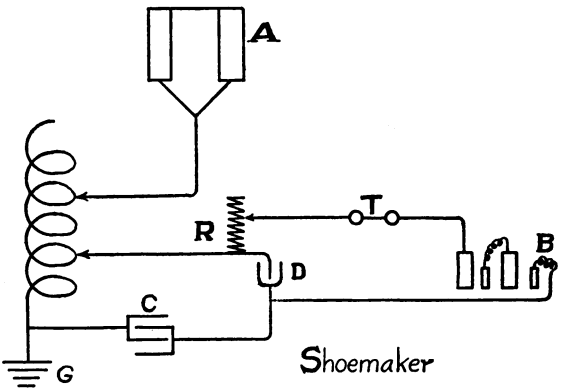

Fig. 5.

Digitized by Google

both the Type D and E tuners, a four point battery switch permits the operator to use one, two, or three cells in series, the first point being a "dead" point. Fig. 9 shows the appearance of the tuner just described.

Fig. 5 shows what is sometimes known as the Shoemaker receiving circuit. An electrolytic detector is used and a tuning coil which has two slides, one slide varying the inductance of the open circuit and the other for the purpose of resonating the closed detector circuit to the open circuit. The battery B is in series with a resistance R, which is non-inductive, current from this circuit flowing through the detector and telephones.

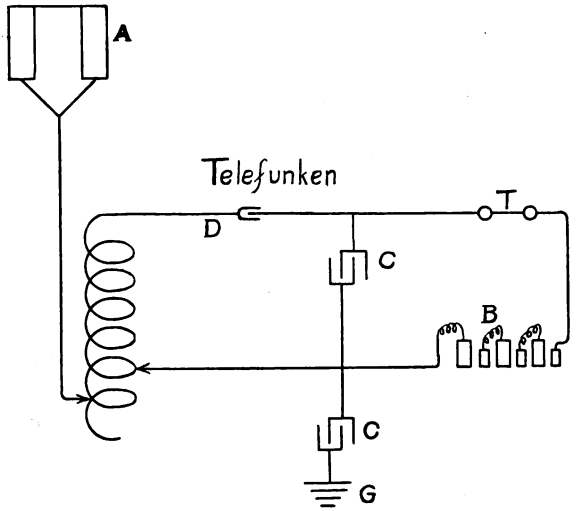

Fig. 6.

In Fig. 6, which method of connecting is accredited to the Telefunken system, no resistance is provided for the regulation of the current through the detector, hence apparatus connected as in Fig. 5 would give greater flexibility of detector adjustment. Figs. 5 and 6 are known as *directly connected* receiving sets, and are being generally succeeded by the *inductively connected* type or by a combination of the two.

Fig. 7 shows the connection of apparatus as applied by Marconi to eliminate, as far as possible, the annoying atmospherics or as more commonly known, "Static," which often will drown out all signals unless very loud and of a high musical note. "Static" is caused by atmospheric electrical discharges creating what Dr. Fleming terms "Vagrant Waves" and which, if of sufficient

Digitized by Google

strength, will affect any tuned circuit unless means are provided for filtering them out. Such means are supplied by the Marconi X-Stopper, and Dr. Fleming states that "if the antenna A, is influ-

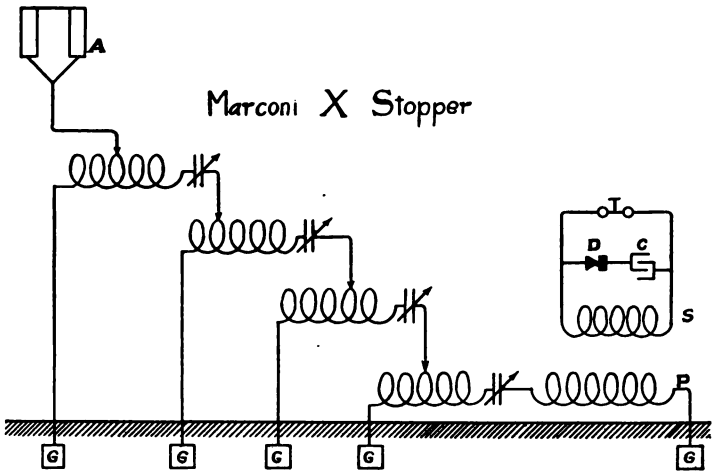

Fig. 7.

enced by a solitary wave, or by an irregular disturbance from a solitary wave, or a short train of waves non-syntonic with the period for which the antenna (circuit) is tuned, then these oscillations pass to earth, but they do not set up oscillations in the chain of connected condensers. If, however, a syntonic train, having passed

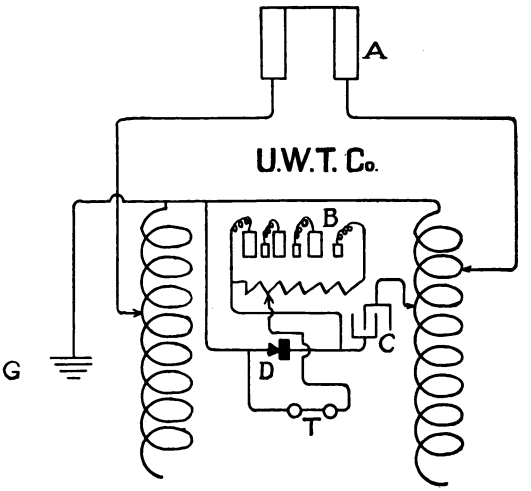

Fig. 8.

Digitized by Google

a considerable number of waves falls upon the antenna, then the repeated oscillations excite sympathetic oscillations in the chain of condensers and inductances and finally influence the receiving instrument at D."

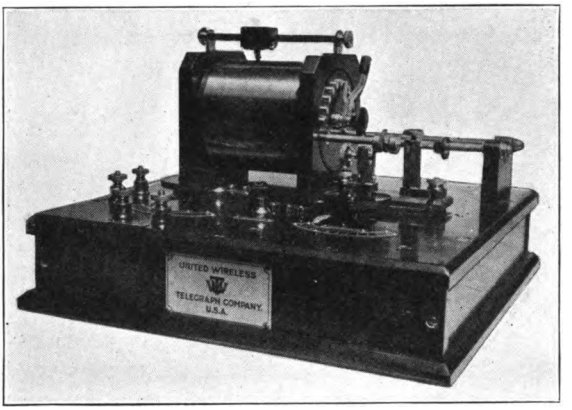

Fig. 9.

In actual practice, the author has used this scheme to advantage in working through static which was so strong, using the type of receiver diagrammed in Figs. 3, 5 and 6, that the noise could be heard four feet away from the receiving telephones. At the time mentioned, the apparatus was connected exactly as shown in Fig. 7, the coils and the condensers being of precisely the same dimensions and form.

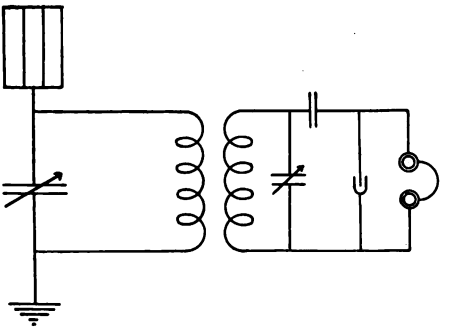

Fig. 10.

Another receiving circuit shown in Fig. 10 and known as the Telefunken Inductivitely coupled type uses an electrolytic detector. Dr. Austin has stated that no other advantage than a slight increase in selectivity is gained by tuning the detector circuit, that

Digitized by Google

is, that no louder signals are produced. However, by a number of experiments and by actual practice the author has found that not only louder signals *are* produced, but a very marked increase in selectivity is obtained by tuning the detector circuit, when a silicon, carborundum or perikon detector is employed. Fig. 10 provides for this by varying the amount of capacity in the closed circuit.

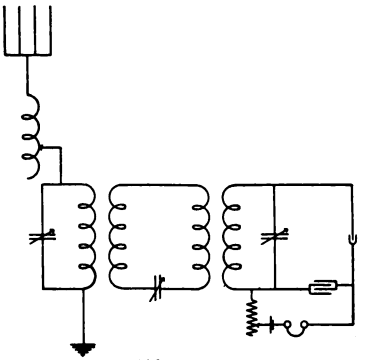

Fig. 12.

Fig. 12 illustrates what is termed a Stone *weeding* out circuit. Two loose coupler receiving transformers may be used in this circuit, but although there is an increase in selectivity by using such a "hook up", there is a large loss occasioned by the number of inductive transfers.

Figs. 13 and 14 are what are known as "Fessenden Interference Preventers" and differ greatly with Figs. 7 and 12 in the method employed for obtaining selectivity. In Fig. 13, a tuning coil L is provided by Fessenden, known as a "rotary tuner," consisting of a roller constructed of some conducting material upon which is wound bare copper wire. A second roller constructed of insulating material is threaded, making grooves in which the bare wire from the first roller can be wound. This makes a tuner by the use of which any desired inductance may be obtained and permits very close tuning. The circuit LPG is tuned to the desired frequency and the secondary circuit S^1S of a receiving transformer tuned to the circuit LPG. PS and P^1S^1 are two receiving transformers, connected as shown with a fixed condenser. To tune to circuit LPG, a switch, not shown in Fig. 13, is placed between the variable condenser on the right and P^1. Now when a wave of different frequency than LPG is tuned for strikes the aerial, it induces an E. M. F. which produces a flow of current having two possible

Digitized by Google

paths to the earth, one path being over the circuit LPG and the other over LP¹G. However, S¹ is wound in opposition to S, so that by adjusting the circuit including P¹ and the variable condenser

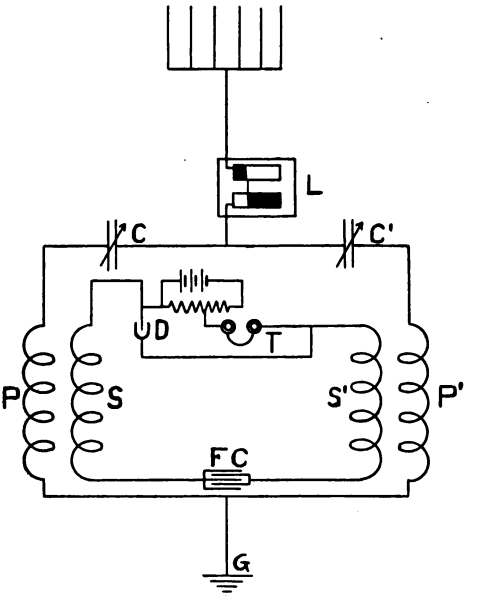

Fig. 13.

between L and P¹ the current divides, equal effects from it being present upon the coil P of one receiving transformer and P¹ of the other. But as the secondaries of the two receiving transformers are wound oppositely, the E. M. F.s induced upon S and S¹ neutralize and the interfering wave has no effect. The addition of a small fixed condenser in the detector circuit and in series with it materially strengthens the signals when a circuit such as Fig. 14 shows is used.

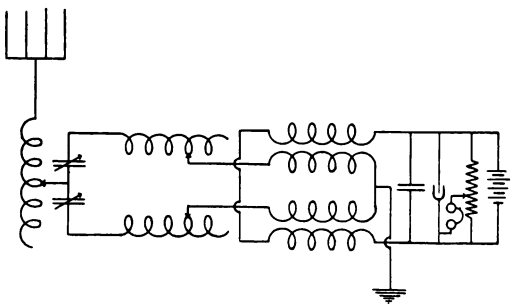

Fig. 14.

Digitized by Google

Officials of the U. S. Navy gave this type of receiver and a modification of it, shown in Fig. 14, a test, the results of which are described below. Much practice is required to successfully operate the different types of Fessenden Interference Preventers, and when the signals desired to be eliminated require nearly the same adjustments of receiving circuit as the desired ones, and the source of interference close at hand, the strength of the desired signals are weakened, if readable.

REPORTS ON THE "FESSENDEN INTERFERENCE PREVENTER."

Department of the Navy,
Bureau of Equipment
Washington, 28th November, 1904.

Tests of the Fessenden System.

"91. On 15th August the representatives of the National Electric Signaling Company began to install the Fessenden system at the Navy Yard Station, and on the 19th at the Highlands.

"92-99. Description of rules governing the test, one rule given as follows:—'absolutely no messages or signals to be sent by either station during the time assigned to the other station—not even an acknowledgment.'

"100. At 10 P. M. the Board adjourned until 10 A. M., 30th August, when it met to make the interference test; Captain Rodgers and Lieutenant Edgar at the Navy Yard station; Commander Peters and Commander Fiske at the Highlands station; Lieutenant Commander Jayne on board the "Topeka." From 10:23 to 10:57 a press dispatch of 861 words was received from the Highlands at the rate of 20 words per minute with the loss of two words in the headline and two mistakes in the text. During this time, until 10:45, with the exception of intervals of a few minutes, the Topeka was interfering continuously. The Topeka was anchored off Tompkinsville, five and a half miles distant from the Navy Yard station.

"101. From 11:27 until noon the receiving ship Hancock at the Navy Yard, 630 yards distance from the Navy Yard station and the experimental station in building No. 75 at the Navy Yard, 226 yards from the Navy Yard station, interfered continuously.

Digitized by Google

During this period the reception from the Highlands was not good, one message being received with the loss of one word in three.

(Note.—The operators were not notified that this test would be made and were not prepared with apparatus to cut out nearby interference, hence the loss of one word in three. During the dinner hour, an improvised arrangement was fixed up, the results with which are given in paragraph 102. It is evident that one word lost in every twelve could have been attained by repeating the message, but no repetition was allowed.)

"102. At noon the Board took a recess until 2:15, then met and continued the test for interference. The station at building 75 interfered from 2:15 until 3 P. M. During this period the average loss was one word in twelve, in a message sent from the Highlands. From 3:15 to 3:45 the secrecy sender was tested. A message of 362 words was sent from the Navy Yard station to the Highlands by a Navy operator, at the rate of thirteen words per minute (Continental Morse), with the secrecy sender. The Topeka had instructions during this period to read the message if possible."

A portion of a report of the Navy Yard station at Newport, Rhode Island, is given below relative to the Fessenden Interference preventer.

"The atmospheric disturbances were so severe one night last week that I was not able to receive the report of a passing steamer from the Lightship on the apparatus, but upon changing to the Fessenden Interference Preventer, the terrific atmosphere was cut down to such an extent that I was enabled to receive the report without any trouble."

(Signed) "A. Y. Forrest,
Electrician, 2nd class."

Digitized by Google

The question often arises in the mind of a student: If the natural wave length of an aerial is greater than the length of a wave desired to be received, how is it possible to efficiently receive such a wave. Fig. 11 shows the "hook-up" for this condition which makes use of a variable condenser in the circuit, as shown, thus permitting a decrease in the wave length of the antenna and

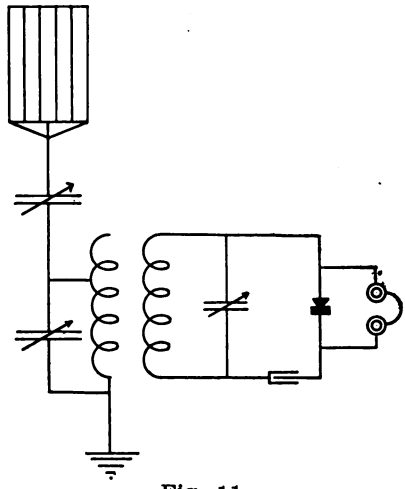

Fig. 11.

adapts it to waves shorter than otherwise can be received. Dr. Fleming suggests that a condenser shunted around an inductance lengthens the wave length of that particular circuit in somewhat the same manner as shunting a circuit would decrease the resistance of it, while placing a condenser in the circuit as in Fig. 11 causes it to act in *series* with the capacity of the aerial, thus raising the frequency of the whole open circuit, thereby permitting it to be easily tuned to short waves.

Suppose a case where the length of an aerial is 800 feet and the length of the wave desired to be received is 800 feet. The question arises, why is it necessary to use a series condenser as described above. Primarily, a certain amount of inductance is necessary in order that energy from the aerial or open circuit be transferred to the closed or oscillating circuit. The addition of even a small amount of inductance to the open circuit for this purpose would at once adjust the circuit to receive a longer wave than 800 feet, hence the use of a capacity (condenser) in series with that of the aerial would raise the frequency of the open circuit, thereby bringing it if desired back to the frequency equal

Digitized by Google

to that possessed by a wave 800 feet in length. Fig. 11 is a very efficient type of receiver.

Where it is desired to use a loop aerial, Fig. 15 shows a good method of connecting the apparatus.

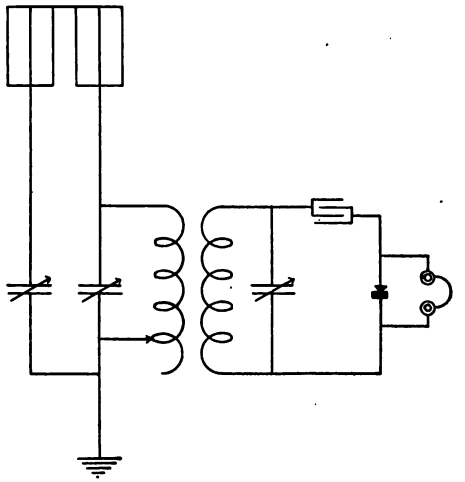

Fig. 15.

Lieutenant-Commander Robinson, in his "Manual of Wireless Telegraphy for the use of Naval Electricians" very nicely describes the conditions necessary for efficient receiving as follows:

"We wish the sending aerial to be a good radiator, but not so good as to give a whip-crack discharge. We want its oscillations to be persistent enough to require for their best reception a receiving aerial tuned to the period of the sender, and as a present standard we have set for the sender a damping of .2, so that it makes 15 complete oscillations before the oscillating current falls to .1 of its original value. We want the receiving aerial to radiate as little as possible; but to so combine the energy of the fifteen waves that the highest maximum is produced in the aerial if the detector is in the open circuit, (or) in the closed receiver circuit if the detector is there or in shunt around it.

"If the sending aerial is coupled so as to send out waves of two different lengths, there appears to be no question that the coupling of the receiving circuits should be such that if they acted as senders they would send out waves of these lengths, or so loosely coupled that their natural period is that of the longer of the arriving waves. (The one containing the most energy.) If, in the case of very loosely coupled circuits or those supplied with quenched spark

Digitized by Google

gaps, but one wave length is being generated, receiving circuits should also be loosely coupled or should be coupled so that the transfer of energy from the open to the closed circuit and the damping of the latter (with the detector, however connected) is

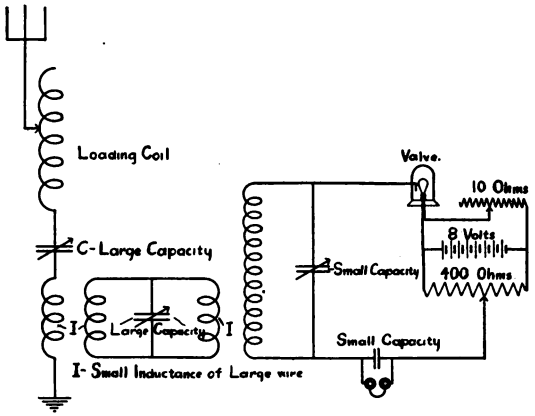

Fig. 16.

at such a rate that a maximum current in the closed circuit is reached at the instant the open circuit has come to rest after being set in vibration by the passing wave train and has radiated or transferred all its induced energy. This is analogous to the statement relative to the quenching of the closed sending circuit (throwing it out of tune) when the open circuit has reached its first maximum. In the case of reception after the closed circuit has reached its first maximum the rectified current in the case of crystal detectors or the battery current in the case of electrolytic detectors has also reached its maximum."

Marconi Valve Receiver Circuits.

All Marconi tuning devices are designed for a special purpose. Either they are extremely selective or have other circuits so arranged that, by means of switches and close coupling, what is known to operators as a "flat tune" is possible in which signals upon a wide range of wave lengths can be heard. The receiving transformers are termed "jiggers" and are constructed upon the ball pattern; that is, the secondary may be wound in the form of a sphere and is *not* pulled out of the primary as is the secondary of the receiving transformer used by the United Wireless Telegraph Company to obtain loosely coupled circuits, but revolves *inside* the primary. Figs. 17 and 18 show the wiring diagram of the circuits

Digitized by Google

of a Marconi Valve Receiver employing the Fleming oscillation valve as a detector. The case containing the apparatus is equipped on its top with a double pole throw over switch with which either

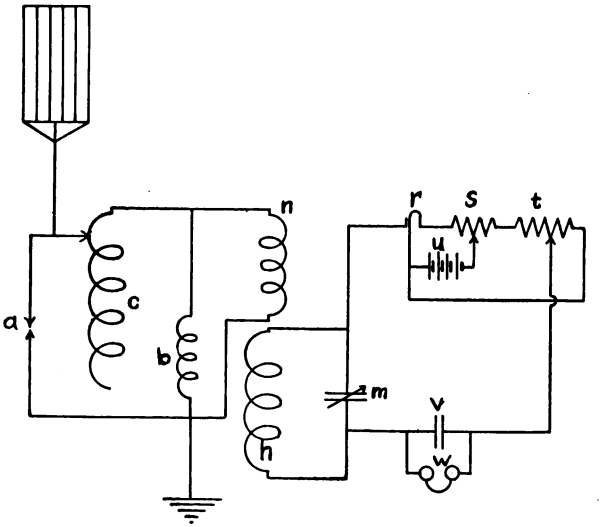

Fig. 17.

the circuits shown in Figs. 17 and 18 can be cut in at will; Fig. 17 showing what is known as the "Stand by" circuit, whose object has been explained, while Fig. 18 is intended to be used when accurate tuning is necessary. The following description applies to both of the figures as both circuits are included in one set.

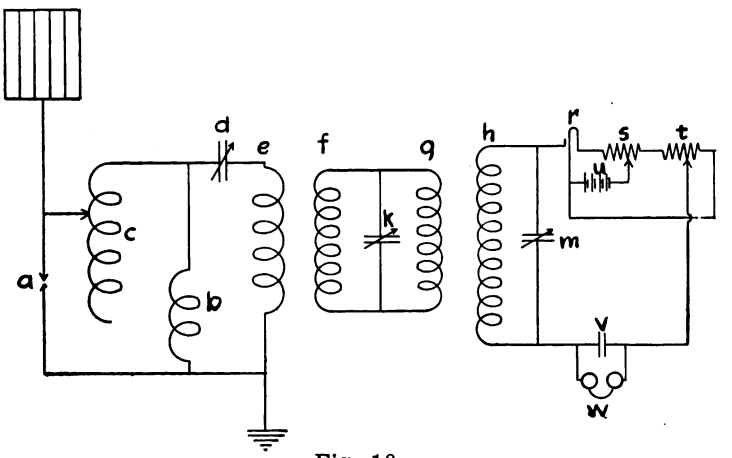

Fig. 18.

Digitized by Google

A is a micrometer spark gap shunted by a large inductance or choke coil b, c is a loading coil which is cut in circuit step by step by a rotary point switch not shown in either diagram; d is an aerial tuning condenser, the handle and scales of which are mounted on the top of the case, e and f are the primary and secondary windings of a receiving transformer of the rotary type; g and h are the primary and secondary circuits of a second receiving transformer whose construction is the same as that whose circuits are shown as e and f and whose coupling is loose but fixed; k is a variable condenser whose purpose is to assist in tuning e f to g h; m is a variable condenser of small capacity of the sliding tube type using ebonite as a dielectric whose purpose is to tune the detector circuit; r, s, t and u are the oscillation valve (two are shown in the wiring diagram and supplied with the tuner), glow lamp rheostat, potentiometer and battery respectively, while v represents a fixed condenser of 0.002 micro-farad capacity shunted by the telephones w. For stand by purposes, the double pole throw over switch on the top of the case may be used, which cuts in the circuit shown in Fig. 17. The coupling of n and h is very close and cannot be varied so that several different length of waves will affect the detector r. The use of two receiving transformers in Fig. 18 obtains greater selectivity than could result from the use of only one receiving transformer.

The wiring diagram of this tuner is shown in Fig. 19. When high resistance telephones are employed, they are connected to the posts marked "telephones." Dr. Fleming states, however, that much better results can be obtained by the use of low resistance telephones of about 100 Ohms when connected to the secondary or high resistance winding of a 10 inch spark coil, whose secondary can be connected in this circuit in place of the high resistance telephones at the place marked "telephones." If the latter arrangement is used, the "plug" shown between the two fixed condensers is removed. Where no potentiometer is provided with the tuner, the short circuiting bar shown as a heavy line in the upper right hand corner of the diagram is removed and a high resistance provided for this purpose is substituted for the bar.

On account of the protective micrometer spark gap and choke coil the tuner may be used very efficiently as the receiver of a "break in" system, and when employed for this purpose is connected across a micrometer spark gap in the ground lead of the helix or oscillation transformer.

Digitized by Google

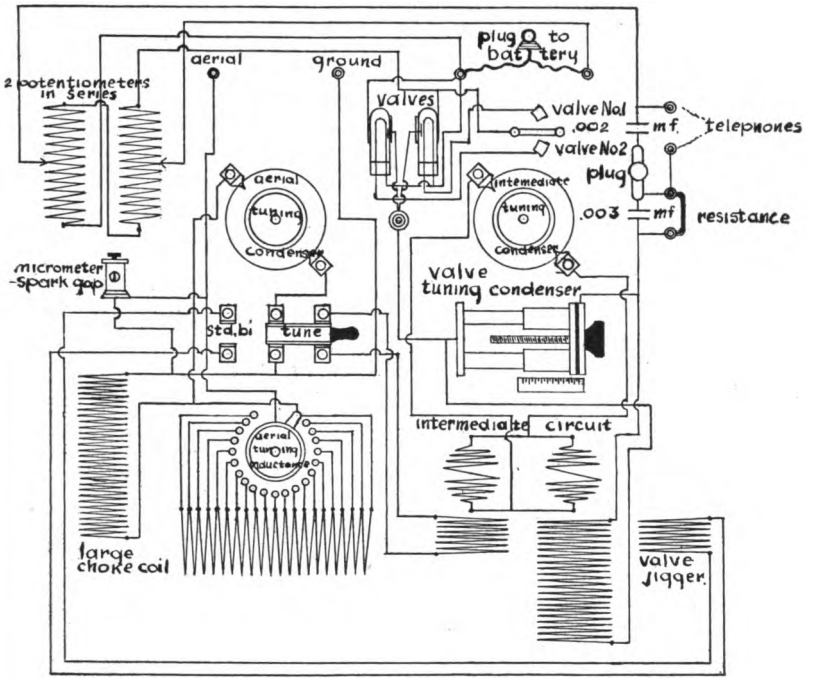

Fig. 19.

The Marconi Multiple Tuner.

Fig. 20 shows the general scheme for the Marconi Multiple Tuner. Switches and means for varying capacities and inductance are not shown. A and g are leads from the aerial and ground; l represents a loading coil whose inductance is varied in twenty steps; c the aerial tuning condenser to which is connected the primary p of a loosely coupled receiving transformer p s, the secondary s together with the condenser C_1 and inductance S_1 forming the intermediate circuit; S_1 is loosely coupled with P_1, which latter circuit with the condenser C_2 forms the detector circuit. The condenser C_1 is called the "intensifier" and C, C_1 and C_2 have capacities variable from zero to 0.002 micro-farads.

The course of the oscillations is as follows: oscillations upon the antenna follow the circuit ALPG and induce currents upon the circuit SC_1S_1 which in turn induces currents upon the detector circuit P_1C_2 which can be made to affect any type of oscillation detector. To use the tuner, no special rule can be followed except that, of course, the aerial circuit must be learned and set

Digitized by Google

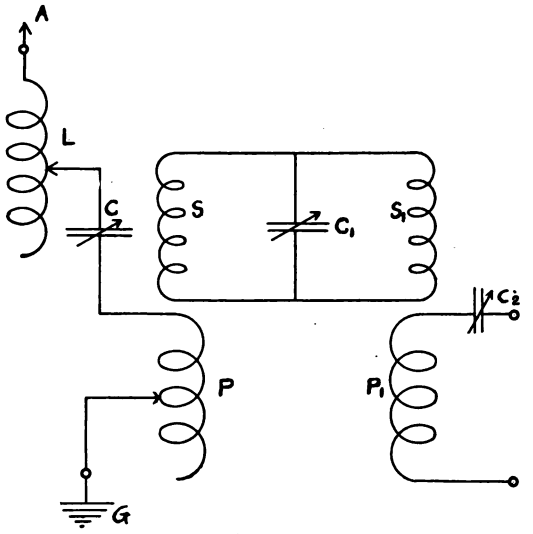

Fig. 20.

for the desired wave length, after which all other circuits must be placed in resonance with it. Dr. Fleming states that the following is the process by which the tuner is adjusted when desired signals are to be intercepted:

"1. Adjust the aerial tuning inductance, keeping the aerial condenser short circuited, and then the aerial condenser must be adjusted until the strongest signals are obtained.

"2. Set the 'intensifier' handle at 90°.

"3. Set the tuning switch to the wave length roughly indicated by the amount of aerial tuning inductance and the aerial condenser.

"4. Throw over the changing switch to tune, and then vary the intermediate tuning condenser and the detector tuning condenser together until the best signals are obtained. It is necessary that these two condensers should be varied as nearly as possible together.

"5. Adjust the aerial tuning condenser to give the strongest signals and if any interference is found, adjust the 'intensifier' to a small value, then readjust the condensers. The further this intensifier handle is turned from 90°, the sharper will the adjustments of the condensers become, owing to the looser coupling and the greater freedom from interference."

Digitized by Google

Fig. 21 is a diagram of the wiring of a Marconi Multiple Tuner, while Fig. 22 shows the appearance of it complete. A

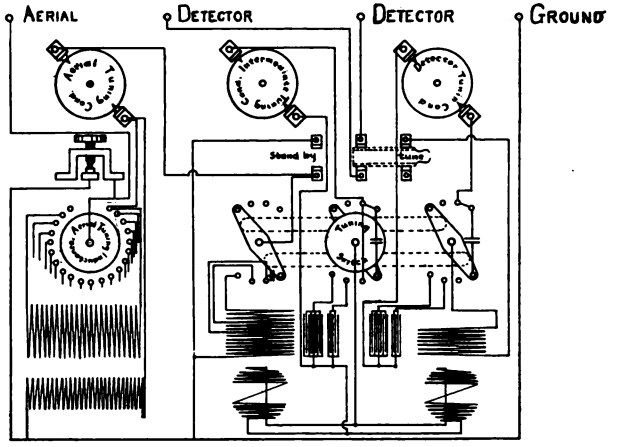

Fig. 21.

Micrometer spark gap shunted by an inductance of 80,000 microhenrys prevents the accumulation of static charges upon the antenna.

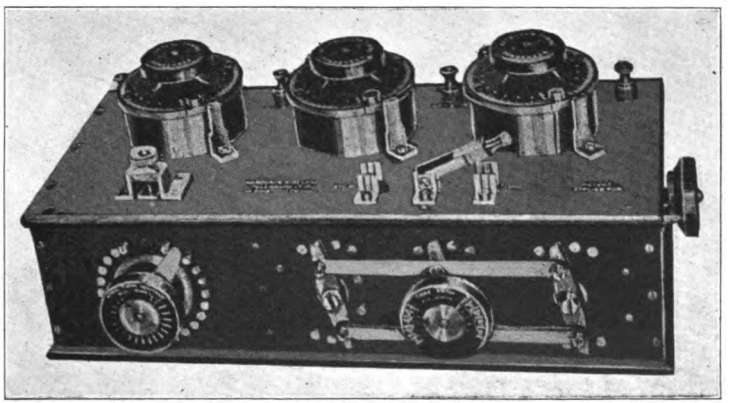

Fig. 22.

In Fig. 22, the left hand condenser is the aerial condenser, the middle the intermediate, and the right hand the detector condenser. The loading coil is controlled by the rotary switch shown on the front to the right of which may be seen the tuning switch. The handle of the "intensifier" is on the extreme right hand end of the tuner. This makes one of the most efficient tuners ever

Digitized by Google

manufactured, and was patented by the Marconi Wireless Telegraph Co., Ltd., and C. S. Franklin, June 4th, 1907.

The instrument can be placed in a case eleven inches high and about one foot nine inches long, the case and contained tuning apparatus weighing about thirty pounds.

In conclusion, where loud signals are desired, the circuits must be properly tuned, which action requires conscientious practice and persistence, and in deciding what scheme of connections to employ, it must be remembered that the more sliding contacts and variable condensers used, the greater the possibility of the circuits not being in good resonance, a condition not desired. The most efficient tuner then is that one which can be most easily adjusted for changes in wave length with the fewest movements, at the same time giving a sharp resonance, and doing so with a minimum loss.

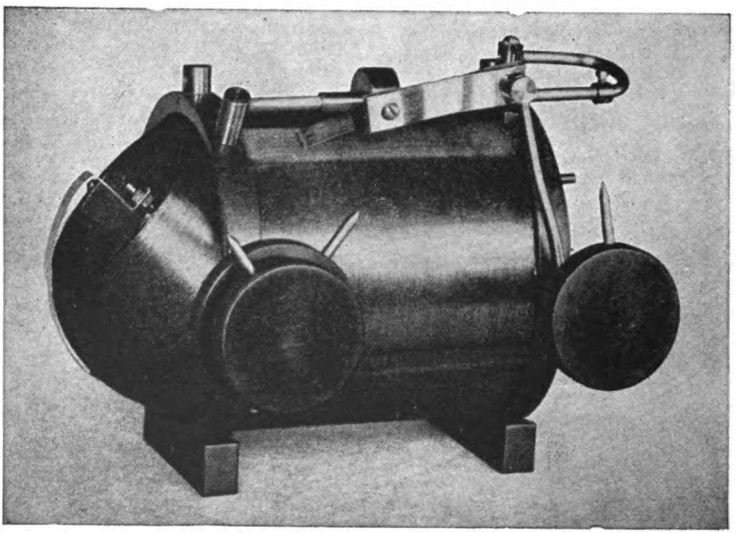

Fig. 23.

A receiving transformer as manufactured by Clapp-Eastham Co., is shown in Fig. 23. The inductance of the coils is varied by sliding contacts, and the coupling by rotation of one coil inside the other.

(Note.—See J. A. Fleming, "The Principles of Electric Wave Telegraphy and Telephony", 2nd edition, page 809.)

Digitized by Google

CHAPTER XI.

Transmitters.

There have been in past years a number of arrangements of apparatus devised to produce high frequency currents and electric oscillations. Some of these arrangements produce damped oscillations, and some undamped. Probably the oldest method employed is that in which the oscillatory discharge of a condenser is made to produce trains of damped oscillations, there being intervals of time between each train.

High frequency alternators have been employed to produce trains of undamped oscillations and direct current arcs shunted by suitable condensers and inductances have also been used. These methods will be treated in this chapter in the turn mentioned above. Chapter VI. dealt with the oscillatory discharge of a condenser, and it has been found that a Hertz oscillator has the property upon discharge, of producing electric waves which may be detected by specially designed receivers. The present systems of damped oscillation generators are merely a modification of the Hertz oscillator. So that in the study of the present systems, one should keep the principle of the Hertz oscillator in mind.

Transmitting sets may be divided into two general classes which are analogous to the classes of the receiver—the Directly connected and the Inductively connected. These terms are descriptive of the type of instrument used to transfer electric energy by induction to the open circuit. In directly connected sets, what is termed an auto-transformer is used, whose most prominent characteristic is that the turns of inductance of the closed circuit may be common to the open circuit. In Fig. 4A, Chapter VIII, will be seen this type of inductance which is more commonly known as a Helix. Movable clips are used to provide connections to the helix and in construction, they should be of sufficient size to give good contact and a minimum of high frequency resistance.

A typical directly connected transmitter is that used by the United Wireless Tel. Co., illustration of the following description being found in Fig. 1. This consists of a high potential open core transformer, (construction of this will be described later), which charges a condenser consisting of units connected in series parallel.

Digitized by Google

Each unit has a capacity of approximately 0.003 micro-farad. This condenser is connected to an auto-transformer or helix, which con-

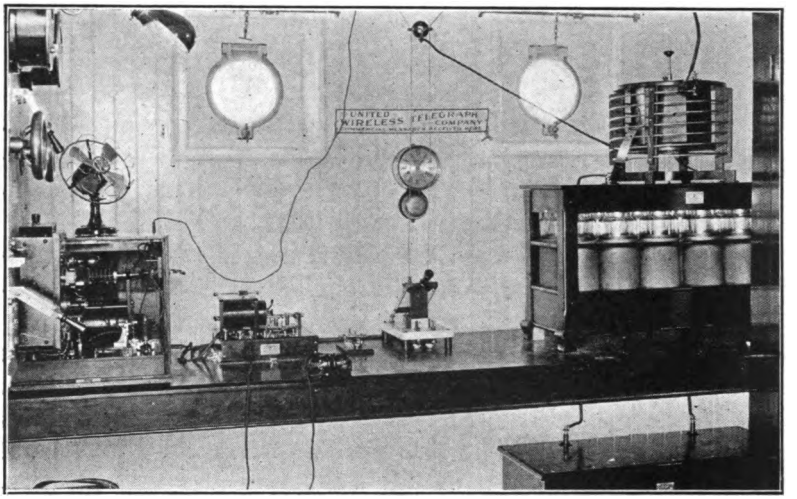

Fig. 1.

sists of either six, (as in Fig. 1, or Fig. 2A, Chapter VIII), or ten turns (see Fig. 4A, Chapter VI), of conductor wound about 12 inches in diameter for a one or two K. W. set, a spark gap enclosed in an asbestos packed box inside the helix and in series with the helix. A movable clip is provided for varying the amount of inductance of the condenser or closed circuit. A ground connection is taken from the top of the helix, and a movable clip furnishes contact with the aerial to the bottom of the helix. The general scheme is as shown in Fig. 2. Here the closed circuit is composed of the condensers, three turns of the helix and the spark gap S, while the open circuit consists of ten turns of helix and the aerial. The spark gap is adjustable in length, but no greater length than 1 inch can be used without endangering the condenser jars. It should not be understood that three turns of the helix is necessary in the closed circuit for all stations, as this of course depends upon the size of the aerial largely.

Often in working the sets described above, a hesitancy of sparking at the gap is noticed after the key is closed. Several things may cause this, but one of the most common causes is moisture in the spark gap case, which is made by the action of the spark upon the enclosed air. This moisture acts as a better-than-

Digitized by Google

air conductor for the high tension current, and so has to become warm and finally evaporate before a spark is obtained in the proper place between the electrodes. Often the wood case gets

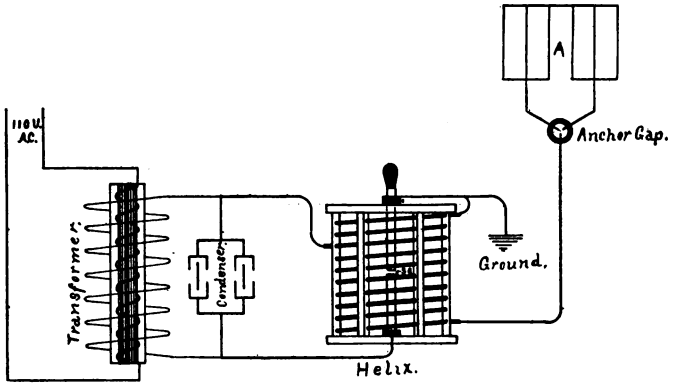

Fig. 2.

wet and current leaks across the fibre and carbonizes it so that a low resistance path is formed which may result in further carbonization. If a continued attempt is made to obtain a good spark without drying the wet places, a fire may result unless this apparatus is given proper attention.

In all of the figures illustrating different types of transmitters, with a few exceptions, no name is given, as the author has seen no evidence that schemes illustrated in the unnamed figures are property of or were patented by any individual or company.

In Fig. 2, an anchor gap is shown, whose purpose is to preserve the loop of the aerial necessary for the Type "D" tuner used by the U. W. T. Co. and to prevent a permanent grounding of the aerial, which would necessitate placing the receiving apparatus in a portion of the ground lead.

There is no particular advantage in placing the spark gap inside of the helix except space is saved in this manner, and this is a convenient place which otherwise would be unused, and in most cases of boat installations the saving of space is an important factor to ship owners.

Fig. 4 illustrates the scheme of connections known as the "Shoemaker" hookup and is used by the U. W. T. Co., of which Mr. H. Shoemaker is Chief Engineer. It has been said that by placing the spark gap directly across the transformer leads and the condenser as shown, the liability of the secondary coils of the transformer to burn out from the condenser "kick back" is

Digitized by Google

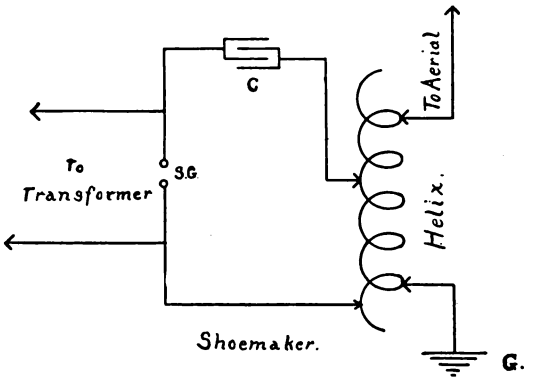

Fig. 4.

lessened. This statement has been questioned by reputable engineers. There seems to be no appreciable gain in radiation by using the scheme in Fig. 4 over that of Fig. 2. The sets designed to be connected as in Fig. 4 are usually provided with a 10 turn helix, (see Fig. 4A, Chap. VIII), the use of which should permit of better resonation than could be obtained by a six turn helix, the latter being generally used when set is connected as in Fig. 2.

Fig. 7 is known as a Fessenden set, the inductance coils in both the open and closed circuits consisting of flat spirally wound con-

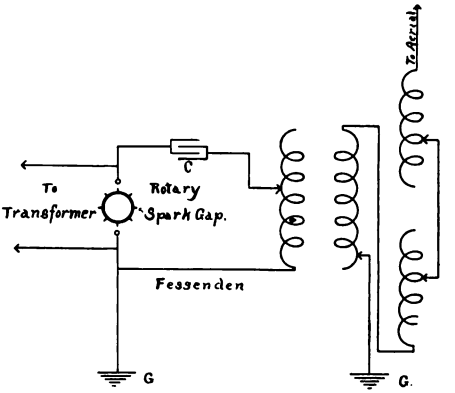

Fig. 7.

ductor similar to what is generally known as a "pancake tuner." These coils are parallel and can be moved away from each other, thus varying the coupling of the circuits, which is advantageous. It will be noted that a rotary spark gap is used, construction and description of which will be taken up in Chap. XIV. This hook-up

Digitized by Google

should radiate oscillations of a certain wave length. Fig. 5, known as a Telefunken set, is no longer used. Lieut. Robinson, in his book "Manual of Wireless Telegraphy", describes the set by stating

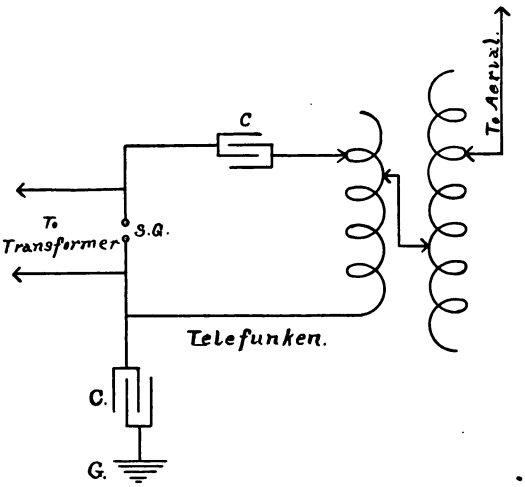

Fig. 5.

that "all other methods of connection afford *direct* path to ground and path through condenser and spark gap. This method of installation affords path to ground through condenser or spark gap

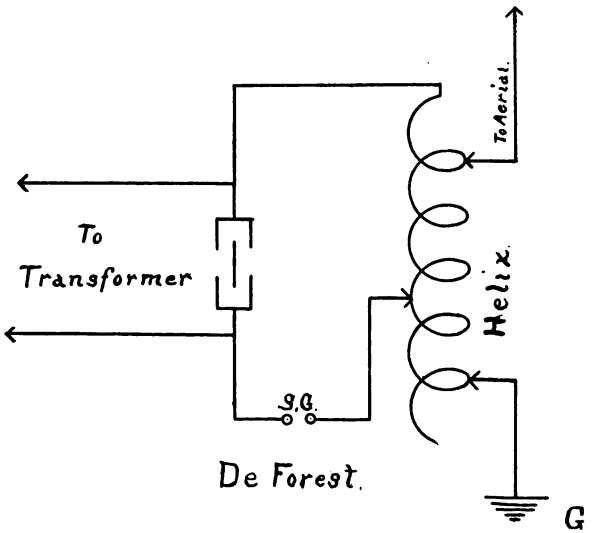

Fig. 3.

Digitized by Google

only and affects tuning. If the aerial is touched when current is on the transformer, the latter having one side grounded, is short-circuited through the body and a severe shock may be experienced." He also states that this arrangement of connections shows "the necessity of giving careful consideration to the relative positions of ground, spark gap and condenser. Errors in connection are sometime made so that the most direct path to ground is through the spark gap. This induces potentials at the gap or condenser approximately equal to those at the upper end of the aerial and produces disagreeable inductive effects in the operating room."

Fig. 3 illustrates the DeForest method of installation, which will be seen is exactly like that illustrated in Fig. 2.

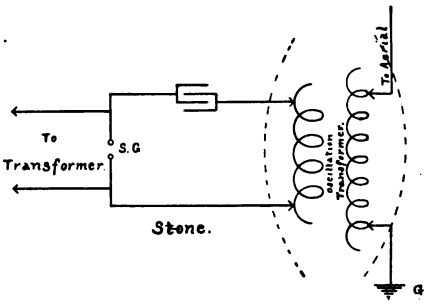

Fig. 6.

Fig. 6, called the Stone system, uses an oscillation transformer, the inductance of which in both the open and closed circuits is variable. The coupling, however, cannot be varied, and a better arrangement is shown in the Fessenden system in Fig. 7. In the latter case the coils set one on top of the other and permit of either loose or close coupling as desired.

The circuits which have just been described are not a complete list of the different arrangements of the transmitters employed, but they are ones most commonly found in small power stations. By small power is meant from 1/2 to 5 K. W. sets.

In operating high power stations most efficiently there are numerous difficulties to be overcome which are not present in lower power sets. In Chapter VI it was mentioned that losses occurred through brush discharges upon condensers. Also we will see in Chapter XII how the construction of spark gaps must be altered as the power of the station increases.

To Mr. Marconi belongs the credit of designing a transmitter for high power stations which is said by Dr. Fleming to be one of

Digitized by Google

the most efficient types of transmitters ever conceived. Dr. Fleming describes this type of transmitter (Fig. 8) in somewhat the following manner: "A metal disc D, insulated from the earth, is caused to rotate at a very high rate of speed by means of a high

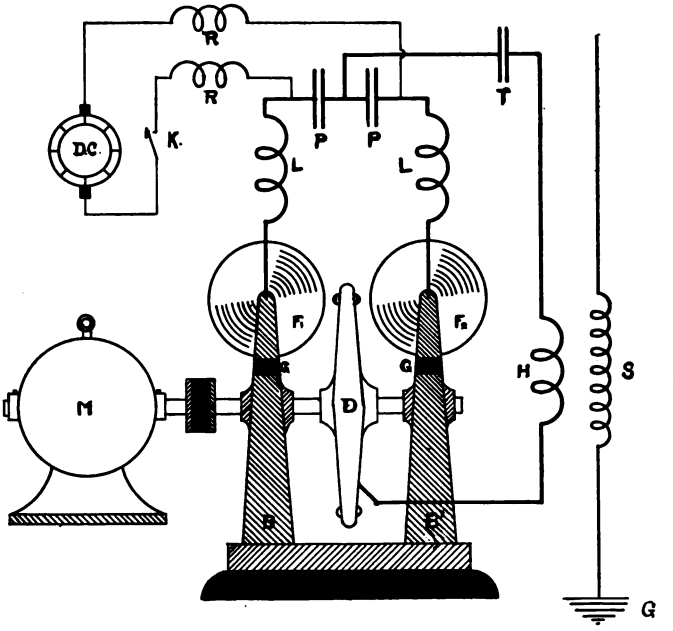

Fig. 8.

speed electric motor M. The shaft which carries this disc passes through bearings in two pedestals B and B′, the upper parts of which (G) are insulated from the lower parts. These upper parts carry two other discs, F_1 and F_2, which may be called the polar discs which can also be rotated at a very high rate of speed. These polar discs have their edges placed very close to the surfaces of the metal disc D. The two polar discs are connected respectively through suitable brushes or rubbing contacts to the outer ends or terminals of two condensers P and P_1 joined in series, and these condensers are also connected through suitable inductive resistances R and R_1 to the terminals of a high tension continuous current dynamo, DC. These condensers will be referred to as reservoir condensers. Against the central or high speed metal disc a suitable rubbing contact is provided, and connected between this contact and the middle point of the two condensers P and P_1 is inserted an oscillatory circuit consisting of a smaller condenser T in

Digitized by Google

series with an inductance which last is connected directly or inductively to the antenna. The circuit containing the condenser T and the primary coil H of the oscillation transformer is tuned to the period of the antenna circuit SG. The metal disc D is provided with studs upon its periphery as shown in the figure and the key is placed in the circuit at K." Dr. Fleming also states that "if the circuits are in resonance and the dynamo DC generating sufficient E. M. F. and the discs rotated, a discharge will take place between the polar discs F_1 and F_2 and the middle disc D, this discharge being neither an oscillatory spark or an ordinary arc, but it will create powerful oscillations in the condenser T and the coil H."

Mr. Marconi explains the operation of the set as follows: "Imagine that the source of electricity DC is gradually charging the double condenser P and P_1 and increasing the potential at the discs, say F_1 positively and F_2 negatively. At a certain instant the voltage will cause the spark to jump across one of the gaps, say between F_2 and D. This will charge the condenser T, which will then commence to oscillate, and the charge in swinging back will jump from D to F_1, which is charged to the opposite potential. The charge of T will again reverse, picking up energy at each reversal from the condensers P P_1. The same process will go on indefinitely, the losses which occur in the oscillatory circuit TH being made good by the energy supplied from the generator DC. If the disc is not rotated or rotated slowly, an ordinary arc is at once established across the small gaps and no oscillations will take place. The efficient cooling of the discharge by the rapidly revolving disc seems to be one of the conditions necessary for the production of the phenomena."

This type of transmitter gives undamped oscillations and is stated by Dr. Fleming to have stood up under a very severe test.

Several assertions have been made by different inventors and experimenters to the effect that theirs is the most efficient transmitter yet employed, but where a certain type can be used efficiently for certain power sets, it might prove very ineffective for sets of higher power, and at present, there are so very few really high power stations that reliable information is lacking relative to the assumed efficiency.

Transformers.

In the early days of wireless telegraphy when small power was used to attempt wireless transmission, an induction or spark

Digitized by Google

coil with the necessary vibrator, and the source of power—a direct current dynamo or secondary cells—was all that seemed available for creating electric oscillations. Various reasons for inefficiency caused the spark coil to be discarded and in its place the alternating current transformer was adopted.

Transformers used in wireless telegraphy may be divided into two general classes, the closed core and the open core. The names given these two classes are descriptive of the manner in which their magnetic circuits are completed.

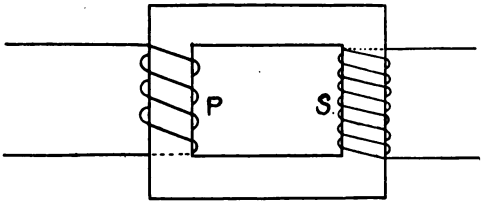

Fig. 9.

Any transformer consists essentially of three things, first a core of iron, generally laminated, that is built up of thin sheets of soft iron or in open core wireless transformers a core constructed of thin soft iron wire; second, a primary winding and last, the secondary winding. The arrangement of the primary and secondary coils differs in many ways. The primary may be wound over the core, and the secondary over the primary, or the two windings may be wound upon entirely different legs of the core. When the iron core forms a complete path for the flux, the transformer is said to be a closed-core transformer, and when the iron core does not make a complete path for the flux, i. e., the lines of force are compelled to pass through air or some other non-magnetic substance, the transformer is said to be of the open core type. Fig. 9

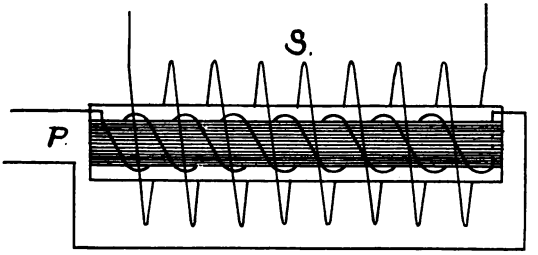

Fig. 10.

illustrates a transformer of the closed core type and Fig. 10 the open core type. P and S in both figures signify the Primary and the Secondary windings respectively.

Digitized by Google

It is obvious that a transformer is a necessary part of the equipment of a wireless station as the oscillatory discharge of a condenser is occasioned by a quantity of electricity stored upon the plates of the condenser. To store up any charge of moment requires an E. M. F. which is great when compared with our ordinary 110 volt incandescent lamp circuit, as the quantity of electricity measured in coulombs is the product of the capacity of the condenser and the E. M. F. in volts applied to it. We might from the above statement conclude that a small voltage could be used with a large capacity and still accumulate a charge of sufficient moment to satisfy our demands. This is true within certain limits, but we shall see in the study of spark gaps why it is that voltages below 2000 are seldom used for wireless transmission. The open core transformers of the United Wireless Telegraph Company range from 30,000 to 40,000 volts approximately on secondary.

Now, the current supplied by commercial light and power companies is usually 110 volts or thereabouts, and this voltage has been generally adopted as the voltage most conveniently handled. It sometimes reaches 120 volts. Also it may be either direct or alternating current. If alternating current is available, eliminating the necessity of a converter or motor generator set, and it is at 110 volts, the sending key may be inserted in this circuit with no danger to the operator. Conductors carrying currents at this voltage do not demand as high insulation as would higher voltage currents.

To obtain alternating current of high potential is the purpose of the transformer and when used in this manner, it is called a *step-up* transformer. Conversely, were a low potential desired and a high potential available, the transformer could be used and for the purpose would be known as a *step down* transformer. However, step down transformers are not used in wireless transmitters.

The action of a transformer upon a wireless set may be briefly explained as follows: The primary coil is connected to a source of alternating current, in the circuit of which is inserted a key and aerial switch and has impressed upon it an E. M. F. of say 110 volts. When the circuit is completed through the aerial switch and key, the alternator will supply current which sets up an alternating magnetic flux. This flux not only sets up a counter E. M. F. in the primary caused by self induction, but on account of the expanding and contracting lines of force, sets up an E. M. F. in the secondary coil. In a well designed transformer, the counter E. M. F. set

Digitized by Google

up in the primary coil is very nearly equal to the impressed E. M. F. so that with no current flowing on the secondary, very little current will flow upon the primary. As stated, one volt E. M. F. is produced when 100,000,000 lines of force are cut by a conductor in a second. If there be more than one conductor cut, naturally a higher voltage will be produced. In a step-up transformer this fact is made use of and so the secondary coil consists of a great number of turns, the E. M. F. set up on the secondary at no load being proportional to the number of turns in its coils and the primary E. M. F. That is, were 110 volts impressed upon the primary consisting of 300 turns of conductor, a secondary upon the same core as the primary but consisting of 30,000 turns of conductor would have set upon it an E. M. F. of 11,000 volts, assuming there be no *magnetic* leakage, the effect of the latter being to cause a decrease of secondary E. M. F. at full load. Transformers used for distributing electricity for power and lighting purposes have a small magnetic leakage, it being desired to maintain a constant E. M. F. on the secondary whether the transformer is delivering full load or a fraction of full load. However, a transformer for wireless purposes must be of an entirely different design than that of a commercial lighting transformer, the latter being designed to supply more and more power as the resistance of the secondary circuit decreases, that is, as the load increases. This action by a wireless transformer would result in a poor spark. The load of the wireless transformer is the condenser which charges by the secondary current and at a certain moment the high potential breaks down the resistance of the spark gap and a spark passes which lowers the resistance of the gap to a very few Ohms, this resistance being practically a short circuit for the secondary. Under these conditions, an ordinary transformer would at once supply a maximum amount of current directly across the short circuited spark gap, the gap would sustain an arc similar to that of an arc lamp, and the condenser would receive a very small charge, too small in fact to produce any oscillatory discharge. In consequence, the transformer under these conditions would not be fulfilling the purpose for which we intend it. Were the transformer designed to draw a very small current when the oscillatory discharge of the condenser is beginning, no arc across the gap would take place after the oscillatory discharge has ceased, and upon the next period of charging the condenser would accumulate a quantity of electricity and thus be performing its duty in a manner

Digitized by Google

as is desired and necessary for the production of oscillations. As was stated, magnetic leakage, which in reality is magnetic lines, which do not cut any turns of a transformer and so are not useful but rather a waste of energy, tends to lower the voltage of a transformer at full load. Were a transformer designed to give a higher voltage than necessary for a certain wireless transmitter and possess magnetic leakage in a high degree, when operated, this transformer's voltage at full load should fall, thus partially eliminating the probability of the transformer establishing an arc across the spark gap, which it would be very liable to do under other conditions. This would be a desired result, as the condenser would get its charge as is intended.

Another way to prevent arcing is to insert coils of variable inductance in series with the primary coil of the transformer. Upon one and two K. W. transformers of the Marconi and United Wireless Co.'s, the magnetic leakage caused by the open and straight core feature is sufficient to permit of the transformer being used with no coils of variable inductance, or as they are more commonly called, *reactance coils.* The Clapp-Eastham Co. manufacture a transformer for wireless purposes which is closed core in construction yet the magnetic leakage feature is taken care of

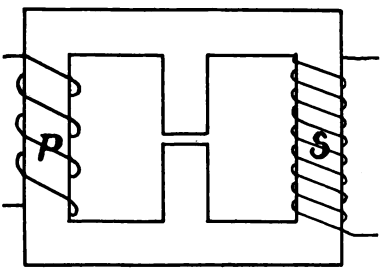

Fig. 11.

by there being two lugs of iron on the core and a part of it as shown in Fig. 11. This type of transformer for small sizes has taps from the primary brought out to a switch which is a part of the transformer and permits variations of power being easily made so that the maximum power need not be used when unnecessary.

It has been a long standing question among wireless engineers as to the comparative efficiency of the open and closed core transformer for wireless transmission. Both types must be used in conjunction with reactance coils unless special means are provided in the construction of the spark gap to get rid of the arc, or the

Digitized by Google

transformer must be so designed that the magnetic leakage is great. If the magnetic leakage is great, both types would possess low power factors, making a consumption of power necessary before power is obtained from the transformer. That is, with the latter condition, were an ammeter placed in the primary circuit and current caused to flow through the ammeter and primary coil of the transformer, a deflection of the needle of the ammeter would be noticed which with some transformers would indicate that a current of as many as five amperes would flow on the primary circuit without any energy being obtained from the secondary, which in this case would be left an open circuit. . This loss might be eliminated by designing the transformer for a high power factor*. But in this case, we would again have the arcing spark to contend with. So that the comparative efficiency of the closed and open core type has been more of a practical than theoretical one. Transformers of both types are now manufactured which do not need

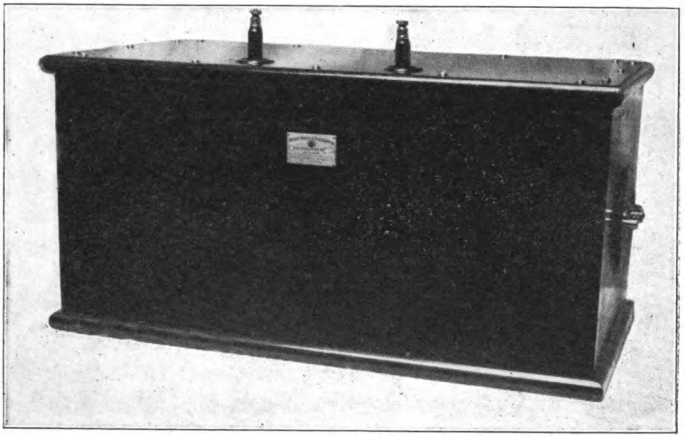

Fig. 10A.

to be immersed in insulating oil, the secondary being constructed of turns of wire insulated by mica and built in pies (flat sections), thus eliminating the annoyance experienced particularly on shipboard by a leaking oil transformer case. Where large powers are

*Note.—The *Power-Factor* in alternating current circuits or apparatus is the ratio of the electric power in watts to the apparent power expressed by the product of the E. M. F. in Volts and the Amperes of current.

Digitized by Google

necessary, it would be unadvisable to depend upon the magnetic leakage entirely to eliminate the flamey spark, as the power lost in a 35 K. W. station might in this manner amount to seven K. W.

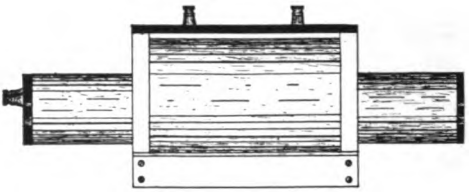

Fig. 10B.

Transformers should be kept dry, should be placed upon an insulated base, and care should be taken to see that all high tension leads are held at least four inches away from a ground or lead to earth, if air is the only insulator between the leads. Figs. 10A and 10B show the usual appearance of the transformers rated from 1 to 2 K. W. used by the United Wireless Telegraph Co. and the Marconi Wireless Telegraph Co., respectively.

By practice an operator can quickly judge whether or not the spark has any flamey qualities, as the arcing is called, and if the set is equipped with an anchor gap in the aerial, the character of the spark can readily be determined by noticing whether or not the anchor gap spark be steady. If not steady or inclined to be alternately thick, then thin, one may look for a flamey spark. However, when an open core transformer is used, a flamey spark seldom occurs on properly equipped sets of 2 K. W. or smaller.

Spark Frequency.

At different times it has been mentioned that there may be one complete discharge of the condenser per alternation of the key circuit current, or there may be more than one. Dr. Fleming explains this by saying that "If the transformers have a very high secondary inductance, or have inductance coils placed in series with their secondary circuit between the transformer terminals and the spark gap, and if the spark gap is set near together, the condenser may become charged to a potential which will enable it to discharge across the gap long before the periodic electromotive force of the transformer has reached its maximum value, as it increases from zero. The moment the discharge happens the condenser empties itself, *and if there is no sensible arc discharge due to the transformer itself* between the spark gap following on this

Digitized by Google

discharge, the still rising electromotive force may again proceed to charge the now discharged condenser, and repeat the process several times during a complete period of the alternator. Hence there may be 2, 3, 4 or more condenser discharges in each half period or alternation of the low frequency electromotive force. This, however, can only happen when the secondary circuit of the transformer is so throttled by inductance as to prevent any true arc discharge from following on after each condenser discharge.

"On the other hand, if the inductance of the transformer secondary circuit is not sufficient to prevent this arcing, then there will be no repeated condenser discharge, but a simple alternating current arc between the spark (gap electrodes)."

Arc Generators.

Thus far only those systems have been described which employ damped oscillations for signalling. Although several inventors have experimented with apparatus designed to produce undamped or persistent oscillations, until recently no commercial application of systems using undamped oscillations has been made.

In 1892, Prof. Thompson produced electric oscillations by making use of a 500 volt D. C. arc shunted by coils of inductance in series with condensers. The general scheme of his apparatus is

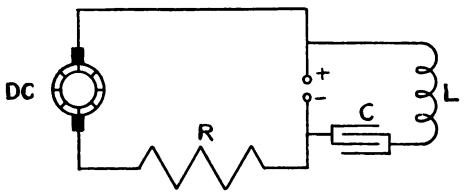

Fig. 12.

shown in Fig. 12. Prof. Thompson was granted a patent right upon this July 4th, 1892. His scheme has been modified and developed and is used in some of the present arc generating systems. In Fig. 12 the action of the arc in giving rise to pulsating currents may be explained as follows: The condenser shunted about the spark gap receives a charge from a 500 volt D. C. generator source, thus causing a fall of potential across the arc terminals. However, the main line pressure is the same so that the condenser in this way receives a slightly greater charge, that is, more current flows into it. At a time when the condenser is fully charged and to a potential equal to that of the main line a magnetic field has been produced around the coil L. When the lines of force of the magnetic

Digitized by Google

field contract there is a current produced flowing into the condenser. This action charges the condenser to a potential higher than that of the main line. At this time the condenser starts discharging across the arc terminals which causes a drop in the voltage of the arc and a more complete discharge of the condenser. The self-induction of the coil like inertia of matter tends to prolong the condenser discharge, so that its potential on account of this action of self-induction falls below that of the main line (500 volts). However, the discharge is finally as complete as conditions of the circuit will permit so that the condenser will start recharging. This process of charging, discharging and recharging continues, and whatever energy is lost or transferred from the closed circuit will be made good by the D. C. Generator.

Duddel's Singing Arc.

Duddel in 1900 produced oscillations by the above method and succeeded in getting an arc which produced a musical note the pitch of which depended upon the capacity of the condenser C and the inductance of the coil L. The frequency of the oscillations obtained from a Thompson or Duddell arc operated in air is not high. Improvements have been made by Dr. Lee DeForest, the Telefunken Co., of Germany, and Valdemar Poulsen, which all consist principally in some device whose action is to steady the arc, thus raising the frequency of the oscillations produced by it. Dr. DeForest's improvement consisted in placing the arc in a chamber containing steam, the steam being produced by the heat of the arc itself. Several of DeForest's inventions were tried out by the American DeForest Co. and the Radio Telephone and Telegraph Co. Whether the failure to produce good persistent oscillations was the fault of the system or in the handling of the apparatus by the engineers installing it we are unable to ascertain.

Poulsen's Arc Generator.

In 1911 the Federal Telegraph Co. of San Francisco entered into a competitive wireless telegraph business, employing a system designed by Mr. V. Poulsen, of Copenhagen. Mr. Poulsen's improvement upon Thompson's arc consisted in placing the arc in a chamber containing ordinary illuminating gas, by artificially cooling the arc electrodes, and by placing the arc in a strong magnetic field. He found that this arrangement not only increased the strength and frequency of the oscillations but greatly increased

Digitized by Google

the potential to which the condenser is charged, this latter action being a factor of the strength of the oscillations. The artificial cooling is accomplished by making use of a water cooled rod for the positive pole of the arc, and the negative pole, which consists of a thick carbon rod, is slowly rotated by some mechanical device. The magnetic field is furnished by a pair of electro-magnets whose coils are in series with the arc. The magnetic field must be very strong to produce the desired effect.

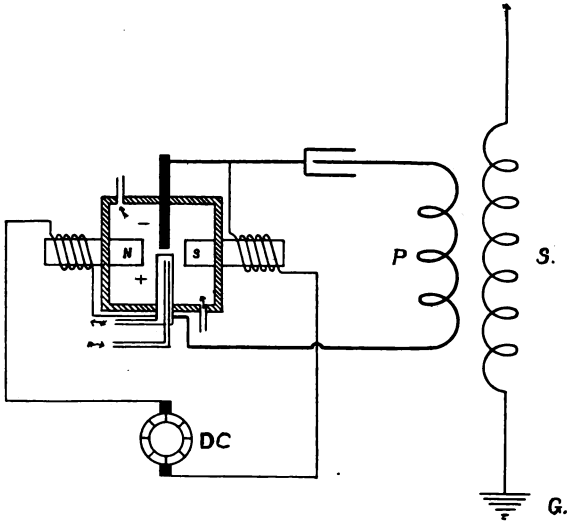

Fig. 13.

Fig. 13 shows Poulsen's general arrangement for producing undamped oscillations. In order to secure best results, a continuous E. M. F. of from 400 to 500 volts is necessary. The carbon electrode must have a square sharp edge but may be of round material, while the copper rod must be blunt shaped, the arc being formed between the edge of the carbon and the blunt end of the copper rod. The chamber in which the arc is maintained must be kept as cool as possible and means provided for admitting fresh coal gas. Instead of illuminating gas, alcohol or gasoline is sometimes admitted to the chamber, the vapors of which assists in the cooling and steadying of the arc. Dr. Fleming states that a capacity of about 0.004 micro-farads and an inductance of 0.1 millehenry gives excellent results and that the capacity must always be low and the inductance large.

Fig. 14 shows the apparatus used by Poulsen Co. for producing

Digitized by Google

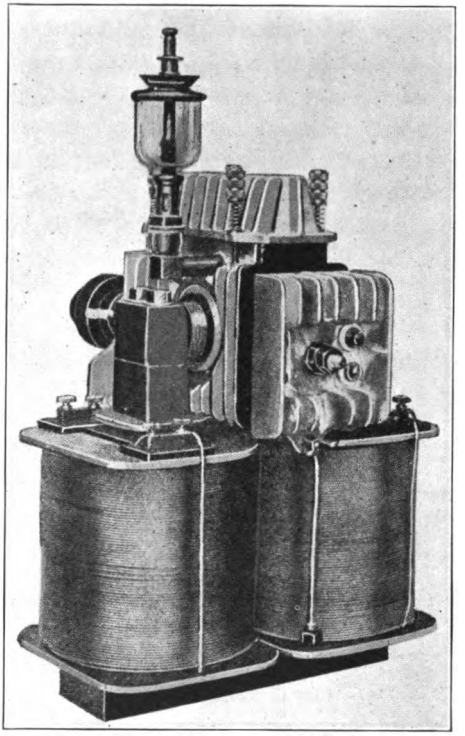

Fig. 14.

undamped oscillations. Attention is called to the arc chamber which is provided with flanges for radiating purposes, the large magnet necessary to produce the magnetic blowout effect, and the cup at the top of the generator which contains the alcohol or other liquid. Although the form of this apparatus has changed, the present type has retained the radiating flanges and magnetic blowout and still uses coal gas or alcohol in the arc chamber. The capacity for the present sets is provided by the aerial itself, there being no other condenser in the circuit.

The arc is usually started by bringing the electrodes into contact and then a spring arrangement pulls them apart to the required distance.

Prof. Pierce states that "the period of oscillation of the condenser circuit shunted about the Duddell, Poulsen or Telefunken arc is not determined completely by the value of the capacity and the inductance in the oscillating circuit, but is also dependent upon

Digitized by Google

the length of the arc, the current through it, the material of the terminals, and the nature and the pressure of the surrounding gas." He also states that Mr. Nasmyth has derived an equation by which the time of the complete oscillation can be calculated. Nasmyth states that

$$T = \frac{2\pi}{\sqrt{\frac{1}{L\,C} - \frac{\left(R - \frac{c + ld}{A}\right)^2}{4L^2}}}$$

where L equals the inductance, C the capacity, R the resistance of the oscillatory circuit, l the length of the arc, c and d constants depending upon the material of the arc electrodes and the gas surrounding them, A the current of the arc.

In working with the arc oscillation generator, it was at first observed that a small current arc using a comparatively large capacity produced low frequency oscillations and if the capacity were decreased the frequency was raised as a result, but with the small condenser the variations of the current through the arc established variations in potential across the arc so slight that very little energy was conveyed to the condenser circuit. It was for the purpose of eliminating this difficulty that Poulsen employed cooled electrodes in an atmosphere of coal gas.

The function of the magnetic field placed transversely to the arc is to stop the arc very suddenly, thus causing a sudden collapse of the magnetic field about the inductance which tends to

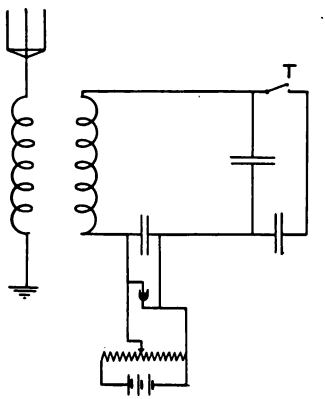

Fig. 15.

increase the E. M. F. in the circuit, thus charging the condenser to a comparatively high potential.

In detecting damped oscillations it has been stated that the

Digitized by Google

telephone receivers will not respond to current reversals as frequent as are those which would be produced by the impact of the waves upon the aerial, so that it is necessary to transform the total energy in one damped wave train into direct current which will cause *one* vibration of the telephone diaphragm. Thus when a wireless signal is detected by the telephone receiver, the sound we hear is produced by all the oscillations collectively, and not by individual oscillations.

Waves radiated by an aerial connected inductively to an arc oscillation generator follow each other in succession and all the waves have equal amplitude at a certain point. It is apparent that if receiving circuits were employed such as are used for detecting damped oscillations, a train of undamped waves might be rectified by the detector, but the effect would be a continuous pull on the telephone diaphragm which would endure as long as the undamped waves arrived at the receiving aerial. It is necessary then to change the receiver circuit somewhat so as to make the effect of the waves audible in the phones. This is accomplished by placing what is termed by Mr. Poulsen a *ticker,* in the receiving circuit. This instrument is merely a mechanical interrupter which may be placed in the circuit as in Fig. 15. Its action is merely to break up the persistent oscillations which after being rectified by the detector will produce the same effect as that produced by a train of damped oscillations.

By employing arc exciters very large currents are produced upon the antenna circuit and the efficiency of an arc transmitter such as the Poulsen or Telefunken is many times that of the damped oscillation transmitters.

Signalling with the arc transmitter is not accomplished by starting and stopping the arc as the spark on the spark system is started and stopped, but in an entirely different manner. The telegraph key is shunted across a very few turns of the aerial inductance, and in a normal position is *closed,* which short circuits the number of turns of inductance to which it is connected. When depressed it merely increases the inductance in the aerial circuit by removing the short circuit, thereby lengthening the wave radiated very slightly. The wave tuned for at a receiving station is therefore longer than the wave radiated when the key is in a normal position after the arc generator has been started. The shorter wave is called by the Federal Telegraph Co. "compensation."

Digitized by Google

Other receiving apparatus for the undamped waves consists of an inductive tuner very loosely coupled and a large condenser shunted about the primary of the tuner as shown in Fig. 16. A ticker is placed in the secondary circuit at T. This instrument,

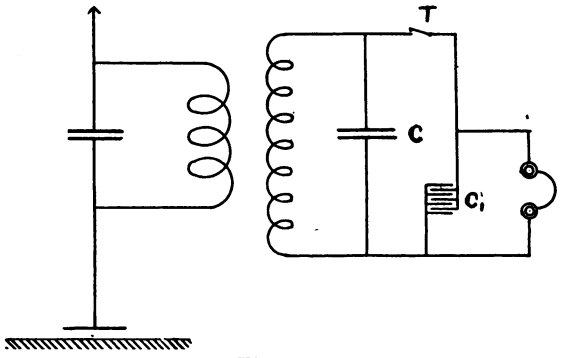

Fig. 16.

which serves to momentarily break the circuit, permits energy to accumulate in the large condenser C and when it closes the circuit some of the energy passes into the condenser C'. When the ticker opens the circuit, the accumulated charge upon C' discharges through the telephones, producing a click. Upon the speed of the ticker depends the note of the received signal.

The construction of the ticker, though apparently simple, is very important. It must be noiseless and reliable. The interruption may be accomplished by a notched brass or copper disc about two inches in diameter rotated by a small motor and having a light spring pressing upon the periphery, the other contact being secured by a stiff spring of brass pressing against the center of the disc. There should be enough notches and the motor of sufficient speed to make the interruptions from 150 to 700 per second.

Advantages of the Sparkless or Arc System.

There are several advantages claimed for the arc method of signalling among which the most important are its silence, compactness of apparatus, lower antenna potentials, more radiation per unit power used than is possible with the spark system, and it is claimed that static or atmospheric disturbances so annoying to the common spark system receiver are much less noticeable when receiving undamped waves. Also undamped waves differing in length by ½ of 1% can be readily discriminated between by using

Digitized by Google

the proper tuning apparatus. Moreover, it is claimed that undamped waves travel over the surface of the earth with much less absorption than damped waves. The claims of inventors and employers of undamped oscillations for signalling seem to be justified inasmuch as the Federal Telegraph Co., owning a Poulsen station at Kansas City, is authoritatively reported to have communicated with a Telefunken station in Honolulu, using only 12 K. W. This is probably the longest distance worked with any power wireless equipment to date.

Digitized by Google

CHAPTER XII.

Spark Gaps.

A very important part of any wireless transmitter is the spark gap. Its functions in the closed circuit is to allow the condenser to become charged to a desired potential and then the air insulation between the electrodes is ruptured and the charges oscillate or surge to and fro until all of the energy in the discharge is dissipated in heat, light, sound, etc. Lieut. Robinson describes the ideal spark gap by stating in his "Manual of Wireless Telegraphy" that "the ideal spark gap would be one which could insulate perfectly while the condenser is charging and conduct perfectly while it is discharging, and the nearer these conditions can be fulfilled the more efficiently will the spark perform its duty. Either condition can be fulfilled alone, but the combination is difficult to obtain." The last statement is indeed true. To date, there has never been a spark gap used which possesses this ideal combination.

The ordinary spark gap usually consists of two electrodes of some conducting metal and these electrodes are oftentimes cooled

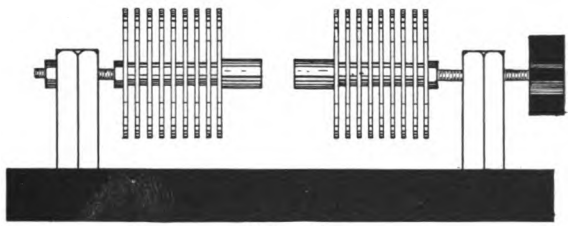

Fig. 1A.

by a fan blowing directly upon them or by radiators composed of copper or any metal which radiates heat rapidly, as is seen in Fig. 1A.

The spark gaps used by commercial companies are for obvious reasons enclosed in a wooden or earthernware case. That of the United Wireless Tel. Co., is enclosed in a six sided wooden case inside of which is a glass tube about six inches high, three inches in diameter and whose walls are about ½ inch thick. This is packed in asbestos. Although this arrangement lessens the noise of the spark, the glass is too thick and on account of unequal inside

Digitized by Google

and outside expansion caused by the heat of the spark, it finally cracks and causes trouble. The electrodes of this spark gap are of composition metal and are usually graduated so that the operator can adjust the spark to any desired length. It should be remembered, however, that if the electrodes are pulled apart too far the spark is rougher and there is a liability of breaking condenser jars. Rough sparks are much more difficult to read through "static" than smooth sparks and so should be avoided if for this reason only.

The opinion has been held by the majority of operators in past years that to work long distances it was necessary to use as long a spark gap as the spark would jump. This view of the matter is incorrect. The author has seen sets working a distance of 400 miles in daylight with a gap of only 0.3 inch and using only 26 amperes on the primary circuit of the charging transformer. This is not extraordinary, in fact, any 2 K. W. set with proper size

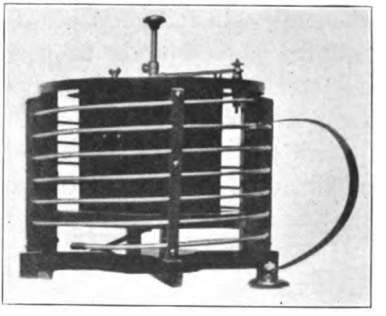

Fig. 1.

condenser and 0.3 inch spark gap should work 300 miles under most conditions if the aerial be of the ordinary size and height.

Fig. 1 illustrates the spark gap of the United Wireless Tel. Co. inside the helix. In using this gap, care should be taken to see that the set screw holding the top electrode in place is tight, so that if the apparatus is to be used in a boat station, the vibration of the boat will not loosen it and allow the electrodes to drop together. The author was obliged while serving as Wireless Inspector to board a boat in motion for the purpose of adjusting a spark gap whose electrodes had fallen together, the operator having hailed another vessel equipped with wireless complaining that he was unable to get a spark on account of his transformer having burned out.

Digitized by Google

Some companies have employed spark gaps consisting of a number of metal balls placed near together and insulated from each other so that the discharge took place between a number of balls instead of only two. This scheme was formerly employed extensively where high power was required and is known as a Series Gap.

The Telefunken Arc.

The Telefunken system employs a spark, the arrangement of which is shown in Fig. 2. The top electrodes C are of copper in the form of tubes, concave at the bottom and holding water. The bottom electrode is of carbon and the E. M. F. applied is small, in fact about 220 volts. As is seen the sparks are in series. Unlike the spark discharge of a condenser, this arrangement does not give off wave trains of decreasing amplitude, but there is radi-

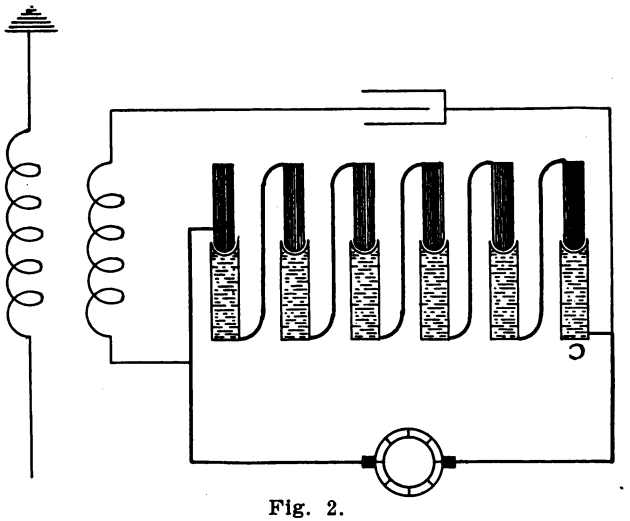

Fig. 2.

ated from an antenna connected to such a set "persistent trains of waves" sometimes termed "undamped" oscillations, inasmuch as the waves all have equal amplitudes when leaving the aerial. Although there is not as much energy in each wave of an undamped train as there would be in the maximum of a damped train of waves, yet the total effect of persistent oscillations arriving at a receiving station might be greater than that produced by a damped train, as they continue for a long time. The systems employing spark gaps which resemble an arc in character are called *singing arc systems* from the fact that signals received from

Digitized by Google

such a set are not of a rough character but are a pure musical note. (See Duddell's Singing Arc for another reason.)

It has been previously stated that a telephone receiver will not respond to currents of frequencies such as are used in wireless telegraphy. It is therefore evident that a telephone receiver could not be used to detect undamped oscillations, as the waves arriving continuously at a station would, as said, be of too high frequency and furthermore would not affect the detector in the correct manner. It is necessary then to change these continuously arriving waves to a frequency which will make them audible. This is accomplished by inserting in the transmitting aerial or open circuit an instrument termed a "chopper" which resembles an interrupter and breaks up the undamped oscillations into groups which, when arriving at a receiving station, act in the same manner as would a train of damped waves.

Poulsen, instead of placing the interrupter in the open circuit of the sending station, uses it at the receiving station. A diagram of this circuit is shown in another chapter.

The Lepel Arc.

The Lepel Arc consists of two flat discs of copper having a thin sheet of a specially prepared paper between them. To start a discharge across the gap the paper may be perforated near the center and, as the discharge continues, the paper is gradually burned up. As there is a very small quantity of air between the copper discs, the process of burning takes some hours. After this has been accomplished the gap may be used on either a direct or alternating current and regulated by the condensers. The shape of the electrodes is sometimes altered and made cup shaped, one of which will hold water whose circulation keeps the electrodes cool, and this action, it will be seen later, has an important bearing upon the action of the gap besides the property of preventing a pure arc. The space between the discs or cup is about .01 inch.

This form of discharger operates most efficiently on about 500 volts D. C. and draws about 1 to 2 amperes, under which condition the inventor, Baron von Lepel claims that messages have been transmitted distances exceeding 300 miles. The essential features of this spark gap are that the spark should occur in an atmosphere containing no oxygen, and that the gap should be very short and well cooled.

It will be recalled that when two circuits, an open and closed,

Digitized by Google

are coupled together either directly or inductively, and an ordinary spark gap employed in the closed or exciter circuit, there occurs an action between the two, resulting in the radiation of two waves from the open circuit of radically different lengths. This is disadvantageous not only because of the fact that a receiving operator could find two places of different wave length adjustment on his tuning coil when receiving signals from a station having a two wave set and therefore cutting in half the possibilities of stations working with no mutual interference, but a set supplying energy of two waves can give neither of them the maximum power of the transmitter.

Quenched Gaps.

From the above it is obviously desirable to use apparatus which will radiate trains of waves of only one wave length, and Prof. Max Wien in 1906, realizing the importance of this fact, applied certain principles, resulting in the elimination of two different wave lengths by application of a spark gap to the closed circuit which quenches itself out after a few oscillations have been made upon that circuit. This quenching action results in a transfer of energy to the open circuit, and the charges will begin to oscillate thereupon with a frequency depending upon the Inductance and Capacity of the aerial circuit. That is, the open circuit oscillations will decrease in amplitude only from their own damping and no energy will be retransferred from the open to closed circuit and then from the closed to the open circuit, an action which takes place upon most transmitters employing ordinary spark gaps.

Reference is made to Fig. 3. The uppermost curves represent the value of the oscillations of the open and closed circuits with an ordinary spark gap while the lower two curves represent values supposed to follow where an application of Prof. Wien's principles is used in the condenser circuit.

Perhaps this may be more clearly understood by experiment. Stretch a string loosely between the backs of two chairs and attach thereto about a foot apart two strings of equal lengths and having a small weight at their lower ends. Keeping one weight, A, at rest vertically, pull the other, B, aside and release it, noting that B will swing freely in the arc of a circle, finally coming to rest. However, as the swinging motion of the weight B decreases, the other weight, A, gradually acquires a to and fro movement, and it will be seen that this action is repeated several times before both

Digitized by Google

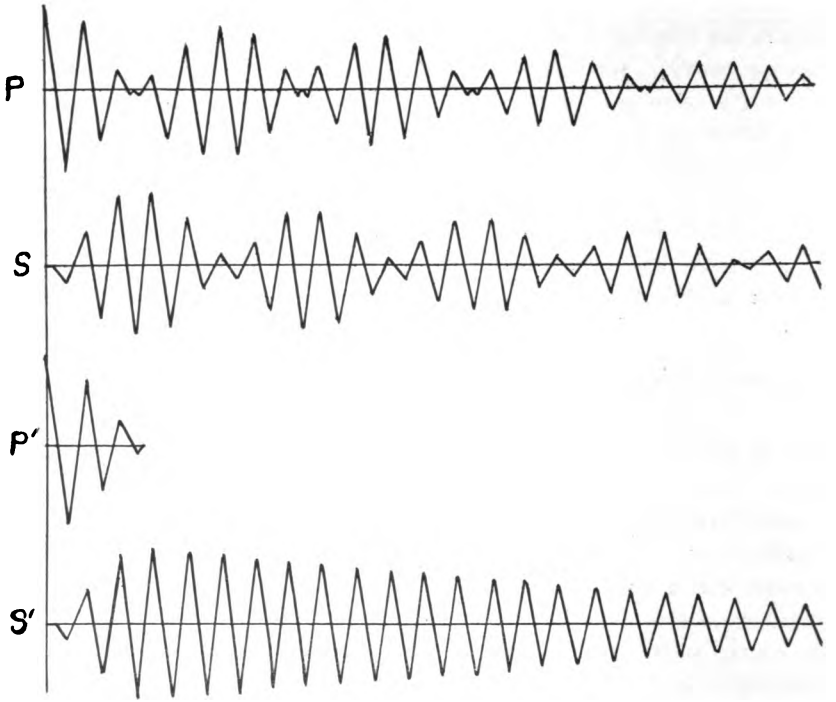

Fig. 3.

weights come to rest. The energy of the weight A is gradually transferred to B, then from B back to A and so on throughout the whole series of energy transfers, and when one pendulum is at its greatest oscillation the other has no motion. This is analogous to the oscillations of coupled circuits in a wireless transmitter, and the action of the two string pendulums corresponds to the general transfer of electrical energy from the closed to the open circuit and back again. The damping of the pendulum A is due to air friction, etc., and the transfer of energy on to B.

Now draw one pendulum aside and release it as before, letting it transfer all of its energy to the other pendulum B, and just as the first pendulum A ceases swinging entirely quickly cut its string. The second pendulum will vibrate to and fro a much greater number of times than was the case in the first experiment and its to and fro movement may be represented by the lower curves of Fig. 3. This last is the action of a "Quenched Spark Gap", the purpose of which is to provide a means whereby the spark rapidly extinguishes itself, and on account of its restored high resistance, does

Digitized by Google

not permit the open circuit to transfer energy back onto the closed, there being practically no continuity of electrical circuit on which any charges can oscillate.

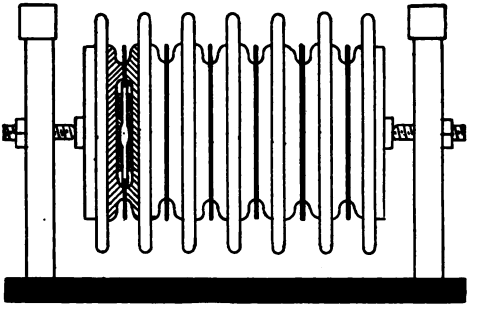

Fig. 4.

Fig. 4 illustrates the construction of a simple Quenched Gap. Mica rings serve to keep the metal electrodes or discs apart about .01 of an inch, the whole number as is seen being in series. It is essential that these discs radiate heat rapidly and to facilitate this radiation the Radio Telephone and Telegraph Co. employed small fans for an enforced circulation of air around the gaps.

Several theories have been advanced to account for the great damping of a Quenched Gap. The one most generally accepted contends that the heat produced by the spark is rapidly radiated by the flat discs, thus restoring the gap's normally high resistance.

Another theory states that the air and gases of vaporized metal between the discs are expanded and compressed by the heat of the spark, thus raising the dielectric strength of the enclosed gas automatically. However, the amount of heat necessary to make a compression of gaseous dielectric of sufficient moment to obtain the damping natural to these gaps does not correspond to the amount of heat generated by the spark in the time given the closed circuit to damp out, so that this theory does not stand up under thorough investigation.

Although much is claimed for the Quenched Gap in efficiency, much must be accomplished in its development before it can be applied to wireless telegraph sets, where continuous use of a spark gap is unavoidable, and many Wireless Engineers contend that Quenched Spark Gaps are not an advancement in the development of wireless transmission but rather that they more nearly approach in effect the old discarded long spark gaps. It is conceded, however, that the wave trains from a Quenched Gap are more per-

Digitized by Google

sistent, and were they at present commercially practicable much less power could be used with which to transmit signals a stated distance than is used with the regular point to point spark gaps.

Rotary Gaps.

We come now to one of the most interesting of the gaps employed recently for efficient transmission,—the Rotary Spark Gap. One form of this has been described in a preceding chapter under the name of the Marconi Rotating Disc Discharger.

Exactly to whom we are indebted for the conception of the Rotary Gap is difficult to state. Mr. Reginald Fessenden has patented several appliances along this line, but his patents seem to apply mostly to rotating dischargers built upon the shaft of the alternator.

For convenience all rotary gaps may be divided into two divisions, the synchronous and the non-synchronous. A synchronous rotating gap is one so constructed and operated at such speed as to permit the condenser to charge once for every alternation of the current applied to the charging transformer. Fig. 5 illustrates its form.

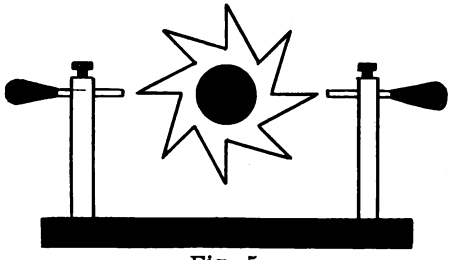

Fig. 5.

A non-synchronous rotary spark gap is one which permits of one to several discharges per alternation. The special advantage of this form of discharger is that the rotating movement of the disc serves as a fan to keep the electrodes cool, and if the points are evenly proportioned around the periphery of the disc, the spark instead of having a rough grating sound will be more or less musical in character according to the form of the current used to charge the condensers. The advantage of a musical note for the telephonic reception of signals has been explained previously.

That the rotary gap is more efficient than the point to point gaps for even a 60 cycle transmitter is a subject open to debate. Unless properly constructed they are impractical for commercial

Digitized by Google

stations. The motor must have enough power to attain its maximum speed quickly so as to make no delays, be noiseless, and be of variable speed, while the disc must be constructed of insulating material and yet possess sufficient strength to prevent its bursting from centrifugal force. Using 960 watts upon the charging transformer the author worked a distance of 240 miles in daylight employing as a radiator an aerial of six wires each 250 feet long, 80 feet above the earth at one end and 40 feet at the other, the conditions being unfavorable. While this would not be extraordinary upon the high seas, the same set using an ordinary point to point gap and the same power did not radiate sufficient energy to cover the distance worked by the rotary. 110 volt 60 cycle alternating current was used upon the transformer primary circuit in both cases.

The author is not ready to make any statements regarding reason or reasons for the greater distance worked with the rotary gap used as described above, and has seen many statements regarding the reasons proven incorrect when a practical demonstration of them was made.

Quenched Rotary Gaps.

We are indebted to Clapp Eastham Company of Cambridge, Mass., for the description of a spark gap and its appliances manufactured by that company which, combining as it does the advantageous points of both the rotary and quenched gaps, should find wide application. Fig. 6 illustrates the Clapp Eastham Quenched Rotary Set.

These sets consist of transformer, condenser, oscillation transformer, key, hot wire ammeter, protective condensers and a novel form of rotary spark gap driven by a small direct connected motor. The transformer used in these sets is self-controlling, and requires no reactance regulator, rheostat, or other device for this purpose, the secondary being 1500 to 2000 volts. A small plate glass condenser is used of 0.03 M. F. capacity, which discharges across a rotating gap of the quenched gap type.

This gap, which is the most interesting and unique feature of the apparatus, is made up of a rotating copper disc, having about forty slots milled in its face, and two semi-circular stationary electrodes directly in front of it, having similar milled slots, the rotating disc being driven by a small induction motor. The motor is connected to the gap through a flexible coupling, and

Digitized by Google

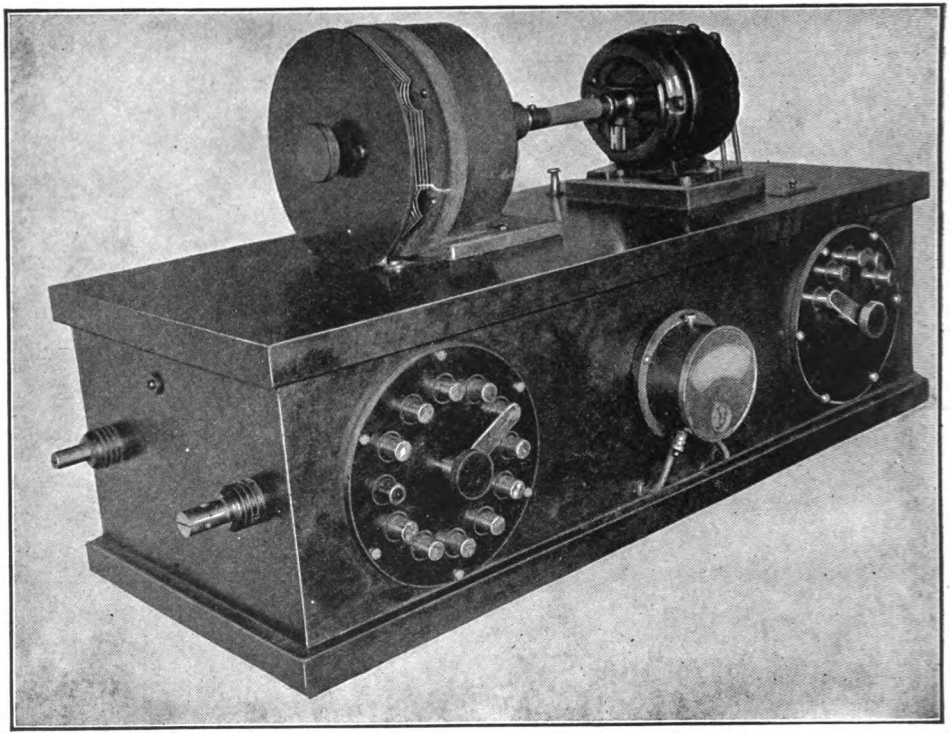

Fig. 6.

the gap itself is entirely enclosed in an iron casting. The two gap connections are made to the two semi-circular stationary electrodes and the current discharges across the gap about .005 inch long to the rotating electrode, and from the rotating electrode to the other semi-circular electrode.

The helix is wound with two parallel copper ribbons, each 1 inch wide and .009 inch thick in the secondary, while the primary is wound with four copper ribbons 1 inch wide by .015 inch thick. A rotating switch serves to vary the number of turns in the secondary of the helix, and is arranged to add very little resistance to the oscillating circuit. In 1 Kilowatt size this outfit is mounted entirely in one cabinet, the dimensions of which are 12 inches wide, 10 inches high and 32 inches long, approximately, the gap being mounted on top of this cabinet.

In 2 and 3 Kilowatt sizes the weight of the gap and the motor render it advisable not to place the gap and motor on the cabinet,

Digitized by Google

but in this case they are mounted separately. At the front of the cabinet are two switches, one for varying the wave length, while the other varies the power supplied to the transformer. In the center of the cabinet between these two switches, is mounted the hot wire ammeter, indicating the antenna current.

This outfit has a number of advantages over the usual spark type, and also over the quenched spark gap type of usual construction, some of which we will briefly mention. The radiation is nearly double that of standard spark type sets, which have been previously manufactured of the same power rating. The supply of energy may be at any available frequency, such as 60 cycle current, generally commercially available, and due to the rotating gap, the discharges are separated into groups, at the rate of about 1200 per second, thus giving the characteristic tone of a 600 cycle alternator, the tone being perfectly clear and is adjustable by varying the speed of the motor driving the gap.

Another feature of considerable importance for portable work is the entire absence of tuning in the antenna circuit, maximum radiation occurring at all times, and over a wide variation of wave length, without other adjustment than the changing of the one switch already referred to, which may be instantly set at any point desired. As the advantages of a quenched gap in utilizing the longer waves, smaller antenna and the radiation of a single wave arc are already well known, we will not mention them further.

As the spark gap runs with almost no appreciable noise, it can be left running during the reception of messages, if desired, although this is unnecessary, as it comes to full speed in about three seconds. Due to the very low potential across the condenser, there is practically no danger of breakdown, and the same applies equally to the transformer, which is of the closed core magnetic leakage type.

It has also been found that the purity of tone is much more easily maintained than with other forms of quenched gaps, being independent of power and length of spark gap employed. As these equipments operating on 60 cycles duplicate in every way the results produced by a 500 cycle set, they should be well adapted to replace sets of a standard spark type, without change of any kind in current supply.

Digitized by Google

CHAPTER XIII.

Aerials.

All circuits sustaining electric oscillations are radiators of electro-magnetic waves. However, closed circuits used in wireless transmitters comprising a spark gap, condenser and inductance are very feeble radiators while open circuits consisting of an aerial connected to coils possessing inductance and thence to the ground are comparatively good radiators. It is necessary then to make use of an aerial or some capacity above the earth in order to obtain the strongest signals in a receiver a distance away from the transmitting station.

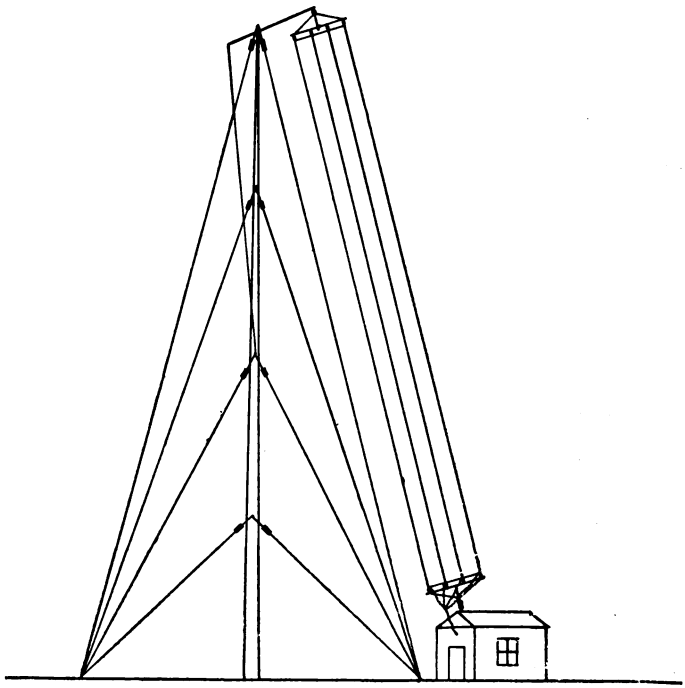

Fig. 1.

Aerials may be divided into two general classes with respect to their radiating ability, viz., open and closed circuit. The most common is the open circuit aerial. Also we may divide aerials into

Digitized by Google

other classes which refer to their construction,—Vertical, Inverted L, T, Fan and Umbrella. The T or Inverted L may not have more than a single conductor. Vertical aerials consist of one or a number of wires connected together and supported from a mast or something applicable so that they are perpendicular to the

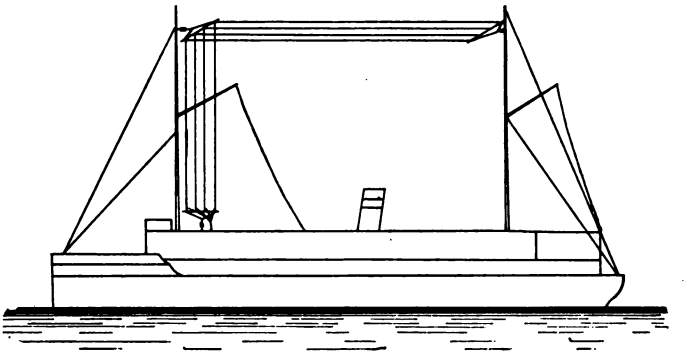

Fig. 2.

earth's surface. This form has been succeeded by the Inverted L type which has a vertical arm connected to an arm which is or very nearly horizontal to the surface of the earth. Fig. 1 shows the general scheme of a Vertical aerial and Fig. 2 an Inverted L aerial.

Fig. 3 is a plan of the T aerial. In Figs. 2 and 3, the conductors are connected at both ends, with the exception of the "Loop Aerial" whose conductors at one end are joined together and at the other end are connected as shown in Fig. 4.

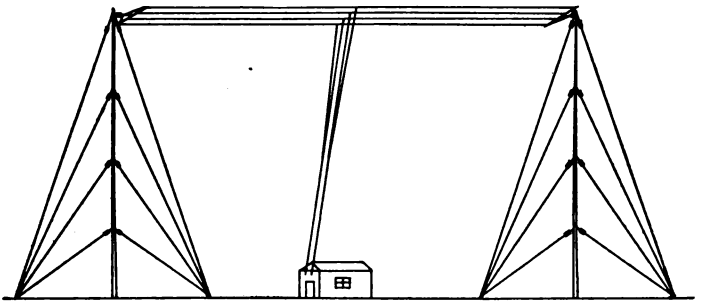

Fig. 3.

Fig. 5 illustrates a Fan aerial whose construction is apparent from the diagram. This type is used extensively by the Federal Tel. Co. Fig. 6 shows the Umbrella aerial, whose name is derived

Digitized by Google

from its similarity in appearance to an umbrella with its stays expanded.

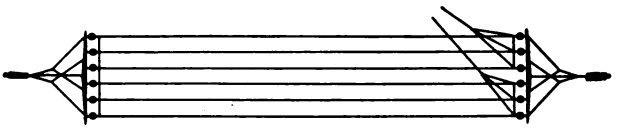

Fig. 4.

In efficiency the umbrella type is probably superior to any other class, but in ship stations this type would be impossible to

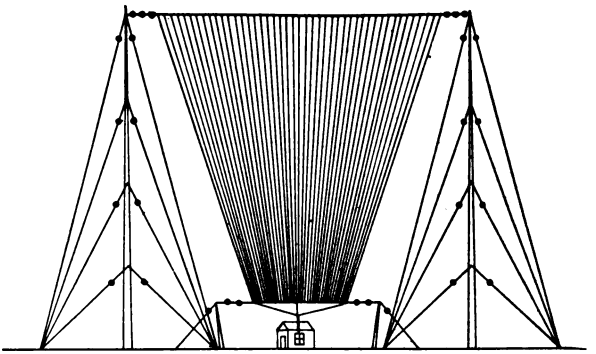

Fig. 5.

erect, so that the T or Inverted L types are resorted to. Choice of the latter two types depends upon the location of the room in

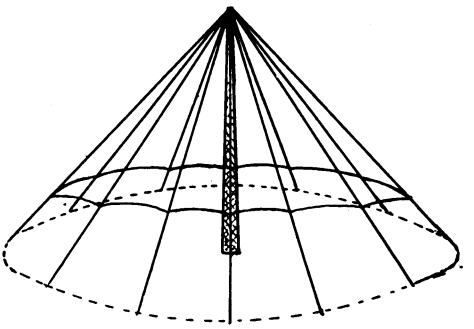

Fig. 6.

which the wireless instruments are to be installed (the instrument room sometimes being aft, forward or 'midship).

Aerial Supports.

In the construction of aerials it is first necessary to provide some means for supporting the conductors. Upon ships, the masts

Digitized by Google

are used, the aerial being preferably as high as possible. Land stations generally require steel towers or wooden masts, in some cases a high building being convenient for supporting one end.

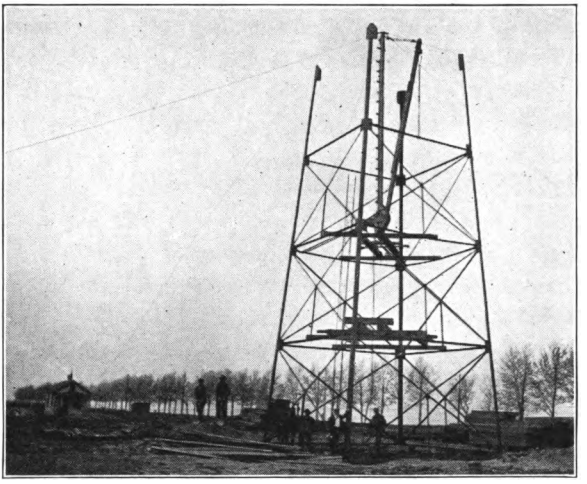

Fig. 7.

Fig. 7 shows a steel tower in course of erection which later was provided with a wooden spar at its top, giving it a height of 246 feet.

Aerial Conductors.

In selecting aerial conductor any non-magnetic material is best used, but it must be of sufficient tensile strength to stand the strain of its own weight. In this respect, stranded Phosphor Bronze wire consisting of seven No. 20 wires is probably superior to any other material.

Many wireless experimenters have stated that it is necessary to use a special conductor in making the aerial. Regarding this, several articles have appeared in which it was stated that aluminum used for the purpose of conducting oscillations is superior to other non-magnetic material. This is questionable, for when copper and aluminum were compared by the author under the same conditions, no difference in efficiency was apparent. However, where temporary equipments are to be installed and a large expenditure of money for towers is not desirable, aluminum, being light, permits the use of light supports such as gas pipe and wooden masts. In large aerials where long spans are necessary, pure

Digitized by Google

aluminum is undesirable as its tensile strength is not sufficient, being about 1/3 that of copper.

Wire is now manufactured of the alloys of aluminum which is of approximately the same weight but has a tensile strength nearly equal to that of hard drawn copper. The advantages of stranded wire consist chiefly in a slight gain in capacity over a solid conductor of the same weight per foot, greater flexibility than solid conductor and lower high frequency resistance. The latter attribute of a stranded conductor does not seem to be shown in the Table of High Frequencies given here. According to this table, a cable of seven No. 22 copper wire stranded has 6.10 times the resistance for currents at a frequency of 774,000 that it has for steady currents. However, were we to use a solid copper conductor capable of carrying as much current as the stranded, its ratio would be much greater than that of the stranded cable. This frequency of 774,000 would be about the frequency of a 400 meter wave.

It must be remembered in dealing with high frequency currents or electric oscillations that the current travels on the surface of the conductor. In a certain test carried out between two stations of the same powers and working under all other conditions as nearly similar as possible, the lead to the aerial of station No. One was of No. 12 copper wire while the lead to the aerial of station No. Two was of seven strands of No. 22 phosphor bronze wire. The signals obtained from station No. One at station No. Two were decidedly weaker than those obtained from No. Two at No. One. After much discussion, the lead to the aerial of station No. One was replaced with stranded phosphor bronze wire exactly similar to that of No. Two and the signals from either station arrived with apparently the same intensity at the other, thus proving that the loss was due to the use of solid wire at station No. One.

No. 12 copper wire would easily have carried a steady current as intense as that on the aerial of station No. One, but when the current becomes high frequency, it travels upon the surface of the conductor and does not penetrate deeply into it. This effect is known as the *Skin Effect* and it is apparent that the conductors in the radiating circuit of a wireless transmitter should have as much surface as possible, hence the use of a stranded conductor.

Digitized by Google

MEASUREMENT OF HIGH FREQUENCY RESISTANCE OF VARIOUS CONDUCTORS; FROM FLEMING.

Conductors	Frequency	Ratio of High to Low Frequency Resistance.
Bare Copper Wire—No. 14 S. W. G.	900,000	7.59
cms. dia. 0.203	535,000	5.85
Bare Copper Wire—No. 16 S. W. G.	475,000	4.57
cms dia. 0.1626	485,000	4.57
Bare Copper Wire—No. 36 S. W. G.	510,000	1.01
cms. dia. 0.0193	880,000	1.06
Bare Copper Cable	470,000	5.66
2 No. 16 wires	785,000	6.50
Bare Copper Cable	774,000	6.10
7 No. 22 wires stranded	465,000	4.20
Copper Wire—Silk covered, 19 No. 36 wires insulated from each other	496,000	1.39

In order to keep the aerial conductors apart spreaders are provided which should be constructed of a light tough wood, such as cypress, and be of sufficient size to stand the strain to which they are subjected.

The breaking of spreaders has caused wireless sets to be out of commission for days at a time. Where the stack of the boat is

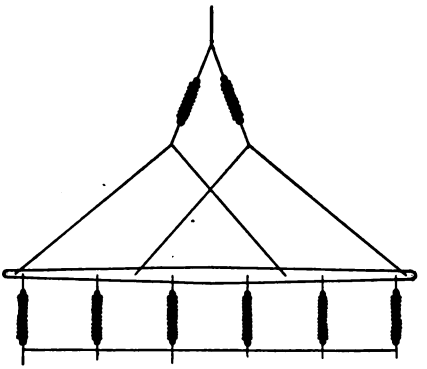

Fig. 8.

located aft and nearly underneath the spreaders the latter should be painted frequently in order to withstand the action of the gases from the burning coal. Wire stays should be fastened to the end of the spreaders to keep the aerial stationary in high winds.

On ship board it is often necessary to lower the aerial and for this reason halyards are used with blocks attached to the masts. It has been found advisable to use steel cable for halyards as the

Digitized by Google

give and take of rope in the block will soon wear it out. Fig. 8 shows the manner of construction of spreaders.

Aerial Insulation.

As the voltage of the currents on the aerial is very high specially designed insulators are necessary. These are generally constructed of electrose, a patent material which will stand weather exposure and heavy strains without the loss of dielectric strength. For 1 and 2 Kilowatt sets these insulators should be at least 12 inches long. For 5 Kilowatt sets it is often necessary to use 24 inch insulators or several smaller sizes fastened end to end. This is especially true at the free end of the aerial where the potential is the greatest. Hard rubber insulators for this purpose have been discarded as they will eventually char over, producing grounds.

Hard rubber tubes may be used for lead in purposes where exposure to the weather is not necessary. When the lead-in insulators are outside the station, special heavily constructed electrose insulators are used with water proof caps on the outer ends to prevent moisture accumulation on the inside. Fig. 9 shows a heavy lead-in insulator with a hooded electrose top and a brass rod through the center for convenience in connecting.

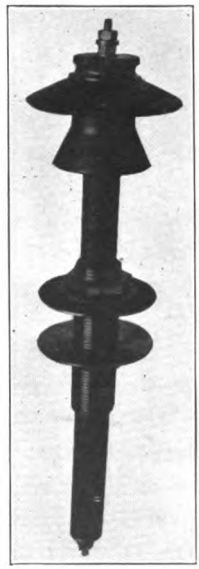

Fig. 9.

Although in the first experiments in Wireless Telegraphy a vertical aerial was used exclusively, it was found necessary to em-

Digitized by Google

ploy greater capacities than vertical aerials could conveniently possess. Prof. Pierce states that two poles 100 feet in height and 100 feet apart supporting an aerial would give approximately the same surface as a single pole 141 feet high supporting a vertical aerial. Although this is true it must be remembered than when a horizontal part is added to a vertical aerial, there is produced a directive effect which is worthy of consideration. That is, more energy in the form of electro-magnetic waves is radiated from such an aerial in certain directions.

Directive Aerials.

Probably one of the first experimenters to investigate the directive action of aerials was Marconi. Setting up an aerial whose horizontal was much longer than the vertical, Marconi took observations at equal distances around it and by means of a T receiving aerial obtained readings upon a theroammeter which varied greatly

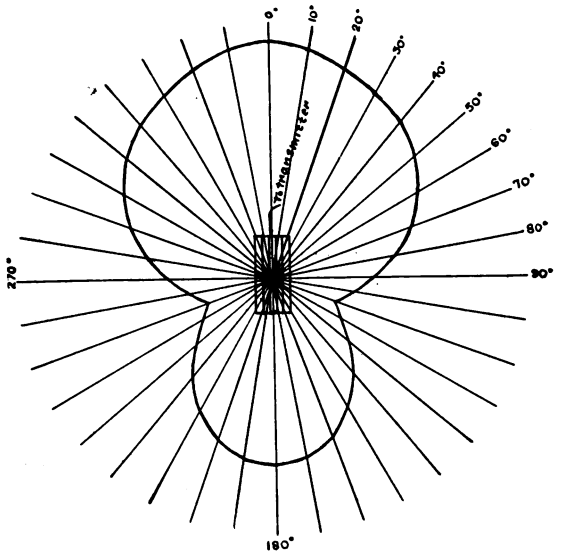

Fig. 10.

at different points of observation. From these readings he plotted a curve which somewhat resembled a figure 8 with two unequal loops. This is shown in Fig. 10, from examination of which it will be seen that the maximum intensity of radiation was opposite the free end of the aerial. This fact was made use of by Marconi in the construction of his aerials for transatlantic wireless communication. Stations maintained by the Marconi Company at Glace

Digitized by Google

Bay and Clifden, Ire., have their aerials inclined toward each other as shown in Fig. 11.

The effect of directive radiation is noticeable in receiving signals from boat stations equipped with inverted L aerials. For example it was noticed in communicating with a certain ship whose wireless equipment was installed in the forward part of

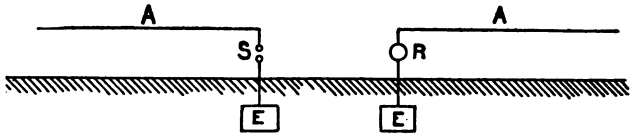

Fig. 11.

the boat that signals were perceptible at a much greater distance when the boat was approaching the land station than when leaving it. Boats equipped with T aerials have a more uniform range.

A description of an experiment may aid in understanding the directive action of certain types of aerials. An aerial whose horizontal arm was 35 ft. long and five ft. above the ground was connected to a ½ inch spark coil as an exciter. Parallel to this and ¼ mile distant was placed a receiving aerial with a carborundum crystal shunted by telephones to detect signals. See Fig. 12. The receiving aerial was 60 ft. long and 5 ft. above the earth. With

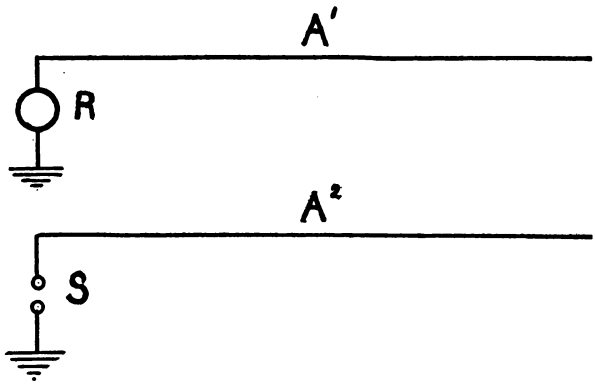

Fig. 12.

this arrangement waves radiated by the transmitting aerial were not detected by the receivers ¼ mile distant. The receiving aerial was then placed perpendicular to that of the transmitter and signals were readily detected. Next the transmitting aerial was moved as is shown in Fig. 11 and an increase of about 25% in the intensity of received signals was noticed. The results of the experi-

Digitized by Google

ment show that it would be advisable to give particular attention to the direction of an aerial under construction if certain results are desired. Where space is obtainable the umbrella aerial can be erected and in such a manner that signals from any directions will be detected with nearly equal intensity, providing the distances of transmission and powers of the transmitters are equal.

In Mr. Marconi's first experiments he made use of plates of metal suspended in the air for obtaining capacity. The latter quality of an aerial is that which should be given the most attention. Until recently, it has been thought necessary to employ very high aerials for long distance work, but a German investigator in an article published in 1911 describes a transmitter drawing 700 watts which transmitted 630 miles in daylight. The antenna of this transmitter was only thirty feet above the earth, but of much greater capacity than is generally used even for high power stations, and, furthermore, was of the directive type. The National Electric Signaling Co. erected a station at Brant Rock, Mass., whose aerial is a steel tube 440 feet high and insulated at its base from the ground. Additional capacity in the shape of four nearly horizontal arms about eighty feet long, each constructed of conducting wire, was provided.

Capacity of Aerials.

Prof. Fleming has measured the capacity of aerial wires by means of a rotating commutator device and in the following table it will be interesting to note that four wires have not four times the capacity of a single wire. In fact Prof. Fleming states "four equal and parallel wires, placed at a distance of about one-fiftieth of their length apart, have only twice the capacity of one wire, and twenty-five wires only about five times the capacity of one wire."

CAPACITY OF AERIAL WIRES OR ANTENNAE IN MICRO-MICROFARADS. (MMFDS)

1 mmfd $=10^{-6}$ of a microfarad.

A vertical wire 0.1 inch diameter, 110 ft. long, bottom end 5 ft. from the earth, suspended in the open air=205 mmfds.

A nearly vertical wire 0.1 inch diameter, 200 ft. long, with end near the ground suspended in the open air=380 mmfds.

A single wire ship aerial about 0.1 inch diameter and 150 feet long ..... = 300 mmfds.

Digitized by Google

A vertical wire 0.14 inch diameter and 12 feet long hung up in a large room ..... = 32 mmfds.
A single wire of 0.1 inch diameter and 14 feet long, suspended vertically in a large room ..... = 40 mmfds.
4 vertical parallel wires 110 ft. long, 0.1 inch diameter, spaced 6 ft. apart at right angles of a square = 583 mmfds.
25 vertical wires 0.1 inch diameter, 200 feet long, arranged fan-shape with top ends about 2 feet apart .. =1640 mmfds.
160 wires, each 0.1 inch diameter and 100 ft. long, arranged conically with bottom ends together 10 feet above ground and top ends 2 feet apart .... = 2685 mmfds.
4 vertical wires 0.1 inch diameter, each 45 feet long, placed fan-shape in front of a building 6 feet apart, bottom ends 10 inches apart, connected to copper bus bar ..... = 485 mmfds.

Some wireless engineers contend that six wire antennae exceed four wire or eight wire in efficiency. This is doubtful as the difference in capacity of four and six wire aerials of equal lengths is very small. Many wireless transmitters are so constructed that close tuning is impossible and it may be that even so slight a difference in aerial capacity as is mentioned above may serve to more closely resonate such a transmitter in a few cases.

Directive Systems of Transmission.

A U. S. patent was issued Jan. 4, 1910, to Messrs Bellini and Tosi for a method of directly transmitting and receiving electromagnetic waves. Two closed or nearly closed aerials are employed of a triangular shape arranged in two perpendicular planes. By means of movable coils connected to the aerials, it is possible to determine within limits the direction of the signaling station. That is, if the indicator of the device pointed in a certain direction, north for example, the signaling station might be either north or south of the receiving station. Although this system of directive transmission and receiving has not been found commercially practical as yet, it is possible that it may find practical application in the future.

Aerial Switches.

A very necessary part of an aerial is the *Aerial Switch*. This is an arrangement to disconnect the receiving apparatus from the antenna when sending. Fig. 13 shows an aerial switch possessing

Digitized by Google

three distinct advantages: The low tension circuit cannot be closed completely and be in readiness for sending until *after* the operator has disconnected the aerial from the receiving set, thus never endangering himself by receiving discharges of high potential; the lead from the earth to the receiving apparatus is connected to the aerial switch so that by throwing the switch *down* for sending

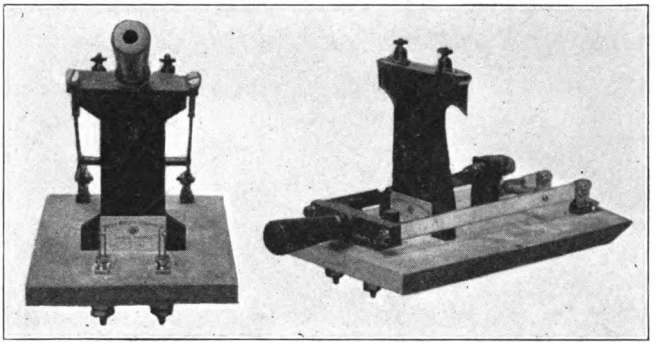

Fig. 13.

this circuit is broken and the tuner has no connection to earth, which assists in maintaining the sensitive adjustment of the detector; it permits the use of a "looped" type antenna.

Any aerial switch should, of course, be constructed to provide

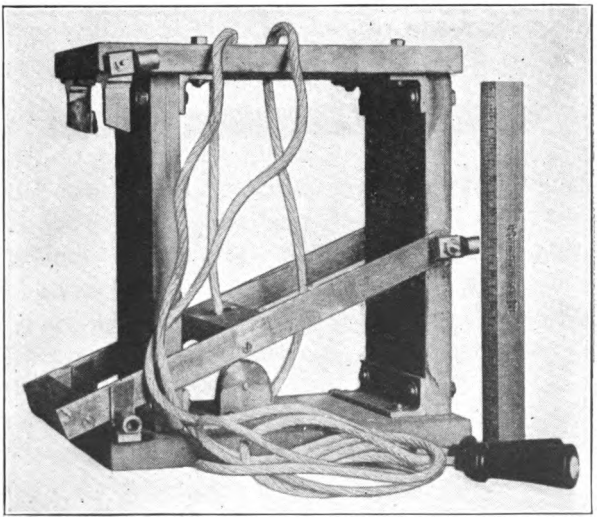

Fig. 14.

Digitized by Google

ample distance between the aerial when sending and any part of the receiving or low tension circuit.

Dangers from Lightning.

Very few wireless stations have been struck by lightning, but there is always the possibility. For purposes of safety a station may be provided with a "Lightning Switch" for use during heavy storms to ground the aerial. Fig. 14 shows a type of this switch as furnished by the United Wireless Telegraph Company.

Digitized by Google

CHAPTER XIV.

Wireless Equipment and Telegraph Stations.

As the equipment used for the transmission and reception of wireless signals is constantly improving as the science progresses, any particular piece of apparatus described at this time may be obsolete at the time the description reaches the reader. The equipment used in large power stations is very different indeed from that employed in stations using smaller power, and an attempt to describe the apparatus generally in use would occupy more space than can be given it in this treatise. There are certain pieces of equipment which are standard for 1 and 2 K. W. stations and it will be the purpose of this chapter to give a description of the equipment used in these stations and some of the annoyances experienced in working with it.

Sending Keys.

One of the essentials of a transmitting set is the sending key. A very common type of this key is shown in Fig. 1. It consists of a bar of metal with a rubber knob at one end for insulating

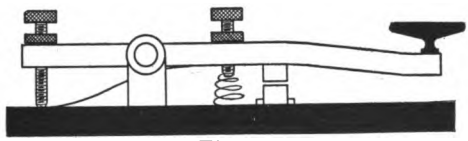

Fig. 1.

purposes and contact points which are preferably of platinum. At the other end is a set screw for adjusting the space between the platinum points. The bar is supported near the middle by an axis resting in metal bearings. To the bar is fastened a spring which serves to separate the contact points and also to aid in adjustment. For stations up to 5 K. W. the key contacts should be at least 3/8 inch in diameter.

A common annoyance experienced in operating the key with power on the circuit is sparking at the contact points, which become heated and may weld together. Some operators work with very "loose" keys and when the key is depressed a sidewise motion may result, thus wearing off the platinum contacts unevenly, in

Digitized by Google

which case they are more apt to stick. Obviously this is undesirable, and if constantly practised, will cause the key to wear out very quickly. Where more than 2 K. W. is employed with 110 volts as the E. M. F. of the primary circuit of the transformer, a choke coil is often shunted around the key. The reactance of the coil should be sufficient to eliminate sparking at the gap in the oscillating circuit of the transmitter, viz., the condenser should not be permitted to charge to a high potential.

The cause of sparking at the key contacts is an attempt to instantly break the circuit including the primary of the transformer, around whose core has been expanded lines of magnetic flux. When the current producing this flux is suddenly withdrawn, the lines of force contract very quickly, producing high E. M. F. on the primary circuit which tries to force a flow of current across the gap made by the separation of the key contacts. By shunting the choke coil around the key a circuit is provided through which this high E. M. F. may force a flow of current, thus eliminating the necessity of the current passing across the gap between the contacts.

Operators should be very careful in working with sets equipped with a key choke coil, as the aerial switch when closed

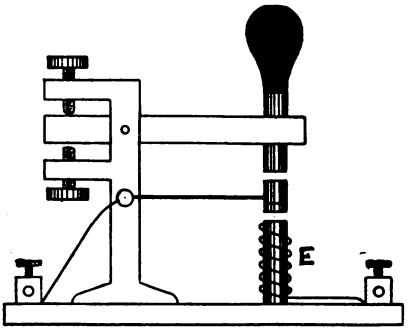

Fig. 2.

completes the primary circuit through the choke coil, inducing currents in the transformer secondary and making handling dangerous.

Dr. Fleming describes a non-sparking key used by the Telefunken Co., as follows: In Fig. 2, (cut being taken from Dr. Fleming's Wave Telegraphy, page 591), the depression of the key brings together contacts, one on an elastic metal slip carrying an iron armature and the other on a pole of an alternating electro-

Digitized by Google

magnet E, through the coils of which the primary current flows. Hence, when the key is depressed the last contact is closed and the attraction of the excited electro-magnet on the armature keeps the circuit closed even although the key is raised. When, however, the A. C. current passes through its O value the armature flies up and the primary circuit is broken without spark.

The principle upon which the key described is supposed to work is practically the same as that of the Gray Sending Key patented in conjunction with the Marconi Wireless Tel. Co. Twice during each cycle of the A. C. current applied to the transformer circuit there is a time when the value of the current is zero and the electro-magnet actuated by the alternating current will therefore exert no pull at this time upon the armature, thus allowing the contact points, one of which is the armature of the electro-magnet, to spring apart and at a time when there is no current flowing so that no sparking will take place at the contact points. Sending faster than 25 words per minute is accomplished with difficulty using this key.

Importance of Meters.

A great many wireless sets are installed upon boats without any kind of meters. On some ships it is the practice of the engineer during daylight to let the normal voltage of the ship's generator fall. As the ordinary wireless transformer is designed for 110 volts it can be readily seen that this drop of line voltage would necessitate a readjustment of the spark gap and oscillating circuit. If meters are provided the drop in potential can be partially remedied by increasing the speed of the motor-generator. This will not entirely make up the loss of voltage to the transformer. By increasing the speed of the motor above its rating the frequency of the alternating current is raised and the wireless transformer will not draw as much current as it would were the current at a frequency for which the transformer is designed. Therefore the motor speed should be maintained as rated.

Fig. 3 shows a typical switchboard for wireless installation. The board itself is a panel of marble supported by iron braces from the floor or wall, as desired. At the top of the board is seen the voltmeter and ammeter, the use of which will enable an operator to intelligently care for his equipment and the regulation thereof. Two rheostat handles are shown, one being connected in the fields of the motor, the other in the fields of the generator. At the right

Digitized by Google

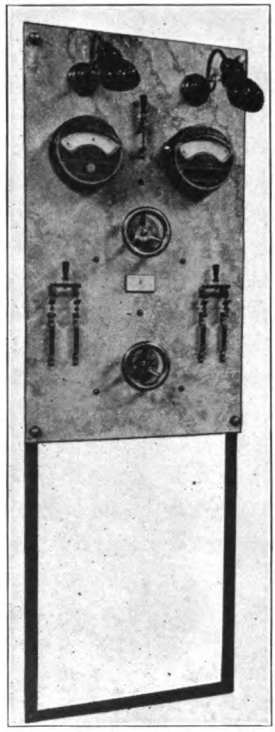

Fig. 3.

and left are two switches with cartridge fuses below which serve as breaks for the direct current circuit to the motor, and A. C. circuit from the alternator. The single pole switch in the center may be used for station lights.

Hot Wire Ammeters.

Some companies provide no means by which a wireless operator can resonate his set. True, the anchor gap is used for this purpose, but makes only a very crude substitute for a hot wire ammeter. The purpose of the latter is to register the amount of current going onto the aerial. This instrument may be placed either in the lead from the helix to the ground, or if more convenient, in the lead from the helix to the aerial. Generally speaking the transmitting sets using no Hot Wire Ammeters are not designed to be closely tuned. That is, a wide variation of inductance in the open or closed circuit does not decrease the sending radius of the set as much as might be expected when the effect of sharp tuning on wireless receivers is considered.

Digitized by Google

In resonating with an anchor gap, one should vary the amount of inductance in the open and closed circuits until the spark obtained in the anchor gap is the thickest. This denotes that the greatest amount of energy possible is being transferred to the aerial circuit. This is only an approximate resonation, and the results depend entirely on the eye of the operator. In actual practice sets have been resonated in this manner and a working radius in miles obtained which after careful resonation with a hot wire ammeter was increased 40%. Whenever maximum efficiency is desired it is suggested that operators own and use their own Hot Wire Ammeters.

Hot Wire Ammeters, unless of special construction, are calibrated by comparison with a standard instrument whose readings are correct for continuous currents only, or for alternating currents of low frequency. When this type of instrument is used for resonance work large errors result, as the resistance of a wire sufficiently large to carry the high frequency current upon the aerial circuit is much greater than for low frequencies. To eliminate this, it is the practice of some manufacturers to use a very small wire in the meter and to shunt it with a larger conductor. The contention is that the small wire's high frequency resistance and true ohmic resistance is nearly equal. This is true, but when the small wire is shunted by a larger conductor to divide up the current,

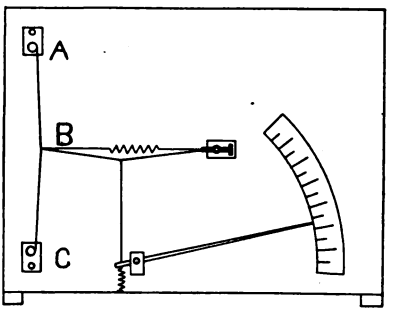

Fig. 4.

the strength of current in amperes passed by each circuit is not determined by the resistance alone, but depends upon the frequency. It is therefore necessary for accurate high frequency current measurement to use a hot wire ammeter something upon the plan of that shown in Fig. 4, and to pass the entire high frequency current through the expansion wire of the meter. This wire should be composed of several strands of No. 36 S. W. G.

Digitized by Google

copper, whose high frequency resistance and true Ohmic resistance is nearly equal.

Nearly all hot wire ammeters work upon the general scheme shown in Fig. 4. The wire ABC carries the current, is heated, ex-

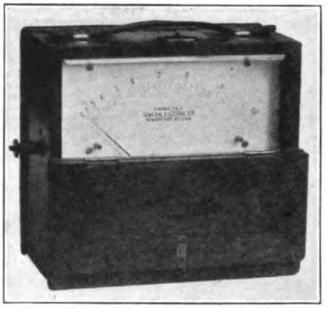

Fig. 4A.

pands, and allows the pointer to move over the scale. A common shunt type of Hot Wire Ammeter is shown in Fig. 4A.

Anchor Gaps.

A common type of anchor gap is shown in Fig. 5. Its appearance and purpose are obvious from the figure and preceding discussion. It preserves the loop of the aerial for a certain type

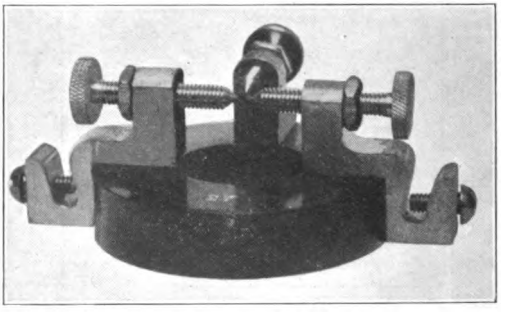

Fig. 5.

of tuner, prevents the aerial from grounding through the helix when receiving, and is a means of ascertaining the energy that is transferred to the aerial circuit.

Grounds.

Often the grounding of a wireless set is accountable for the inefficiency of the station. The U. W. T. Co. demand for their

Digitized by Google

land stations 240 square feet of copper plate buried in moist earth. While it is sometimes impossible, due to various conditions, to construct such a ground, it may nearly be equalled by placing junk, copper, etc., in water, and using leads as large as possible from the set to the ground. In boat stations the ground is generally secured by running a large copper lead from the set to the hull of the boat. When wooden boats are equipped, it is necessary to fasten a plate of copper to some part of the hull below the water line, and connect this to the set by a large copper lead. For a 1 K. W. set the ground wire should never be smaller than No. 6 B. & S. This should be increased about four sizes for a 2 K. W. station. If stranded conductor is used, seven strands of No. 18 B. & S. copper wire is amply sufficient.

A certain station owned by a commercial company was built so that ground connection was made to plates buried in a salty marsh. At first a 10 K. W. transmitter was installed but this radiated so much energy that on account of the interference it made, the 10 K. W. set was replaced with a 5 K. W. transmitter. So similar were the results obtained with the 5 K.W. that it was finally reduced to 2 K. W. After this station had worked successfully for some time a real estate transfer necessitated moving the station. This was done and the new set grounded to wires thrown on the beach and in the water. The importance of good ground was soon made apparent, when a 5 K. W. set was found necessary to obtain the results accomplished with the 2 K. W. transmitter when grounded in the salty marsh.

Upon steamboats much painting is always necessary and in many cases the paint will run under the bolt head or nut connecting the ground wire to the hull of the ship, thus making it a high resistance connection and causing loss of energy both in transmitting and receiving.

It has also been noticed that many sets work efficiently on the transmitting side and no signals can be detected from other stations. Some cases have been found where through accident the ground leads have been severed and the ends remain near enough together to make a spark connection in sending. Ground leads should be frequently inspected to eliminate the above and many other conditions which would lessen the efficiency of the station.

Below is given a copy of rules for care of equipment on board vessels of the United States Navy and which are from Lieut. Robinson's Manual of Wireless Telegraphy.

Digitized by Google

WIRELESS TELEGRAPH STATION ROUTINE FOR UPKEEP OF STATION OUTFIT.

Daily.

Wipe off all instruments with care.

Tighten contacts of receivers.

Clean commutators and collector rings.

Clean zinc oxide from zinc spark points, if fitted.

Blow water out of air lines.

Fill cylinder oil cup and lubricate governor.

In winter, tend heating apparatus carefully to prevent freezing of water in cylinders, pipes, etc., and keep oil fluid if necessary.

Weekly.

Rub down slate panels and instrument cases, examine contacts on panels, and vaseline moving contacts lightly.

Blow out armatures and fields of motor-generators, generators and motors.

Lubricate chains on engines.

Clean bushings or exterior of transformers or induction coils.

Wipe off glass of condenser jars in air and clean contacts if necessary.

Clean jar rack.

Pump up compressed air condensers, if installed.

Clean and polish inductances and exposed leads of transmitter.

Clean thoroughly and set up all contacts of transmitter with care.

Clean and polish spark gap.

Polish key.

Polish wood, metal and rubber of receiver.

Vaseline lightly the contacts of receiver switch and aerial switch, if fitted, after cleaning.

Clean lightning switch and vaseline contacts lightly.

Clean all strainers.

Lubricate pistons of magnetic air valves and reducing valves.

Lubricate cylinders and bearings.

Lubricate working parts of valves in pipe lines and operate same.

Monthly.

Make cadminum tests of storage battery, if installed.

Clean oil injection nozzles.

Pack stuffing boxes of valves in pipe lines.

Clean and tighten contacts of ground where accessible.

Digitized by Google

Semi-Annually.

Change oil of motor-generators, motors and generators.

Refit and line bearings of same.

Empty oil storage tank and clean gauze strainer.

Dismount and clean oil tubes of lubricating system.

Dismount and seat check valves.

Dismount and clean tubes of feed oil distribution system.

Renew asbestos packing of oil pump.

Clean port openings, combustion spaces, exhaust ports, joint screws, and jackets of cylinders, and renew gaskets.

Dismount leyden jar condenser and clean thoroughly.

Lower aerial, wipe off insulators, oil blocks, overhaul halliards, and renew same when necessary.

Polish hard rubber of receiver, etc., using bisulphide of carbon.

It will be noticed that the operator is instructed to "vaseline lightly the contacts of receiver switch and aerial switch, if fitted, after cleaning" and also to "clean lightning switch and vaseline contacts lightly." Undoubtedly such attention upon the part of an operator would assist in stopping corroding of the metal parts, but it would also to a large extent stop signals coming in through these vaselined contacts, as vaseline is an excellent insulator.

Wireless Telegraph Stations.

Probably the largest companies carrying on a commercial wireless telegraph business at this time in the United States are the United Wireless Telegraph Company and the Marconi Company.

The United Wireless Telegraph Company has land stations on the Atlantic Coast, Gulf of Mexico, Great Lakes and Pacific Coast, and a few inland stations. Its ship stations are many, being principally upon ships owned by American Companies. It is attempting no transcontinental or transatlantic business, devoting its services nearly exclusively to marine interests. Commercial telegrams are handled and solicited by the company for transmission between points where stations are maintained, and the service is quick and accurate.

The system employed by the United Wireless Telegraph Co. has been known as the DeForest, but improvements incorporated in the later equipments are probably due to Mr. Harry Shoemaker, Chief Engineer.

The Marconi Company is conducting a business similar to the United Wireless Co. in many respects. It has few land stations in

Digitized by Google

the United States and many in Canada. It handles transatlantic business in competition with the Cable Companies. Many foreign ships calling at ports of the United States are equipped with Marconi apparatus. Its success is largely due to Mr. Wm. Marconi, the employment of whose patents and skill is largely responsible for its efficient system.

The United Wireless Company rarely uses more than 10 K. W. for transmission, the majority of its land stations being rated at 2 K. W., and the majority of U. W. T. boat equipments at 1 K. W.

A 2 K. W., U. W. T. station with proper aerial has a normal daylight range of about 300 miles in summer and nearly 400 in winter. By proper aerial is meant one above 200 feet in height. The range may depend upon the geographical location of the station, it being contended by engineers of broad experience that sets of the same power have a maximum range upon the Pacific coast seaward and a minimum upon the Great Lakes, the Atlantic being between the two.

The receiver of the United Wireless Company has been described elsewhere in this book.

The Marconi Wireless Co. employs from 1 to 150 K. W. for transmitting. In its several transatlantic stations where its largest equipment is installed, special devices are used to assist in handling the large power, and it has taken much study and perseverance to bring the equipment up to its present efficiency.

By the time this book is in the hands of its readers, the Federal Telegraph Company will undoubtedly have been established commercially in this country. It will attempt a transcontinental wireless business between stations west of Chicago, to San Francisco, it already having stations located in the two above mentioned cities, Fort Worth, Tex., Phoenix, Ariz., El Paso, Tex., Kansas City, Mo., Stockton and Sacramento, Cal., Midland and Portland, Ore., and a few other northwestern cities.

The Federal Tel. Co. has acquired the Poulsen patents for this country and to date, has offered no stock for public subscription. It is obvious that the Federal Co. is placing its entire confidence in the arc system and it is interesting to note in the following that Mr. Marconi is quoted as stating that "it was found neither economical nor efficient to attempt to obtain continuous waves." This is directly opposed to the contentions of the engineers of the Federal Tel. Co.

Digitized by Google

An article from the Electrical Review published by the Telegraph and Telephone Age follows:

"Long Distance Wireless Telegraphy.

"In a recent lecture on radiotelegraphy before the Royal Institution, London, Mr. William Marconi gave an insight into the present state of the art of long-distance wireless telegraphy. Air condensers have been adopted at Clifden and Glace Bay and have effected economies in working and in energy losses. It was found to be neither economical nor efficient to attempt to obtain continuous waves. Much better results are obtained when groups of waves are emitted at regular intervals in such manner that their cumulative effect produces a clear musical note in the receiver, which is tuned not only to the periodicity of the electric waves transmitted, but also to their group frequency. Persistency of oscillations is obtained by employing an apparatus consisting of a metal disc having metal studs firmly fixed at regular intervals in its periphery and placed transversely to its plane. This disc is caused to rotate rapidly between two other discs by means of a motor or turbine, and the side discs revolve in a plane at right angles to that of the middle disc. The studs are of such length as just to touch the side discs in passing. The frequency employed at Clifden is 45,000, and when a potential of 15,000 volts is used on the condenser, the spark gap is practically short-circuited during the time in which one complete oscillation only is taking place, when the peripheral speed of the disc is about 600 feet per second. The primary circuit, therefore, continues oscillating without material loss by resistance in the spark gap.

"An interesting feature of the Clifden plant is the regular employment of high-tension direct current for charging the condensers. Direct current at a potential capable of being raised to 20,000 volts is obtained by means of special direct-current generators. These machines charge a storage battery of 6,000 cells, all connected in series. Each cell has a rating of 40 ampere-hours. When the cells are used alone the working voltage varies from 11,000 volts to 12,000 volts, and when the generators and battery are employed together the potential might be raised to 15,000 volts by using the gassing voltage of the battery. The potential at which the condenser is charged reaches 18,000 volts, due to the presence of choke coils between the battery or generator and the condenser. Satisfactory insulation is obtained by dividing the battery into small sets of cells placed on separate stands suspended

Digitized by Google

on insulators attached to girders fixed to the ceiling of the battery room.

"A curious result noticed in long distance work is the effect produced by daylight on the propagation of electric waves over great distances. According to Professor Fleming, the effect should be more marked on long than on short waves, but Mr. Marconi has found the reverse to be true. In some transatlantic experiments in which waves about 8,000 meters long were used the energy received by day at the distant receiving station was usually greater than that obtained at night. Recent observations tend to show that the effects vary greatly with the direction in which the transmission is taking place, the results obtained when transmitting in a northerly or southerly direction differing from those obtained when transmitting east or west. With wave lengths of 7,000 meters and 5,000 meters the strength of the received wave remains steady, as a rule, during the day. Shortly after sunset at Clifden they become gradually weaker and about two hours later are weakest. They then begin to strengthen again and reach a very high maximum about the time of sunset at Glace Bay. Then they gradually return to normal, but through the night remain very variable. Shortly after sunrise at Clifden they begin to strengthen and reach another high maximum shortly after sunrise at Clifden. The received energy then steadily decreases until it reaches a marked minimum a short time before sunrise at Glace Bay. After that the signals gradually come back to normal day strength.

"Mr. Marconi is of the opinion that there is no foundation for the statement to the effect that the earth connection is detrimental to good tuning. A bad earth connection damps out the oscillations due to the resistance, and in that way makes tuning difficult, but no such effect is noticed when an efficient earth connection is employed. The earth wire may be a good condenser or its equivalent in series with it."

It is very difficult at present to obtain accurate data concerning the actual power used by either the Federal Tel. Co. or the Marconi Co., but if the majority of reports relative to this point are to be relied upon to even a reasonable extent, the arc system of Poulsen used by the Federal Tel. Co. is superior to the Marconi Companies' spark system, details of which are only suggested in the preceding article.

Besides the two stations of high power spoken of in the article by Mr. Marconi, his company maintains a station at Cape Cod,

Digitized by Google

Mass., whose power is said to be 45 Kilowatts. This station sends out press bulletins to the ships on the Atlantic ocean, beginning at 9:00 P. M., using the Continental Code. The sending is accomplished in a somewhat unique manner, the copy being first made up in the form of tape, and then put through an automatic transmitter which operates an oil switch in series with the transformer circuit.

Another high power wireless station employing the spark system is owned by the French Government and is situated in the Eiffel Tower at Paris. This station, it is said, has communicated with Glace Bay wirelessly, a distance of over 7,000 miles.

The operating rooms of the Eiffel Tower are situated at the top of the tower, which is 900 feet above the ground.

Break-in Systems.

Several schemes have been brought out in the past for perfecting a system whose use would enable an operator to "break-in" on a message being sent. With most equipments, to break in on a message being sent is impossible, and if a receiving operator misses a word he is obliged to wait until the whole message has been transmitted before asking for a repetition of the word or part of a sentence lost. This makes a loss of time unavoidable.

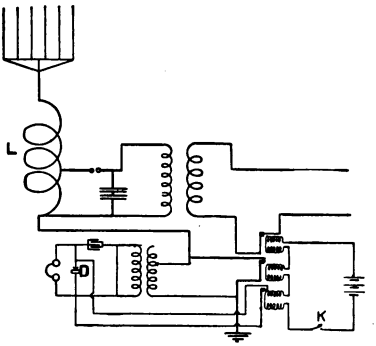

Fig. 6.

In Fig. 6 three relays are connected as shown in such a manner that the closing of the operating key K closes the circuit including the primary of the transformer P, completes the ground circuit from the helix L and throws a very low resistance shunt directly across the detector D. The receiving is done through the helix L. On account of the inductance, the high frequency currents upon the aerial circuit produces very little effect upon the

Digitized by Google

receiving transformer. In practice, it is found that the lead from the helix to the ground through the relay should be very large and possess as near no inductance as possible. Another diagram using only one relay having several contacts is shown in Fig. 7.

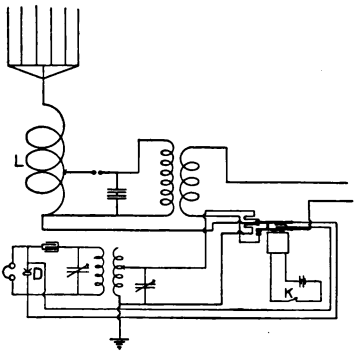

Fig. 7.

The success of the "Break-in" system described above depends upon the detector and the contacts of the relays. Although shunted by a low resistance conductor, it is very difficult to obtain a detector which will not burn out. Carborundum is the best of the mineral detectors for this purpose, but some oscillation valves of the filament type can be used very successfully. If the relay contacts are not properly set, flashing will take place across the tuner. Also, if the magnetic key contacts are not properly adjusted they will stick or weld together. An enclosed or "Muffled" spark gap must be used, otherwise the noise of the spark makes it impossible to distinguish a break signal.

Numerous attempts have been made to construct a duplex system of wireless telegraphy. With the present system, only one message can be sent at a time, thus the capacity of one station is limited just as a single wire telegraph line can be worked by only one operator at a time. (This statement does not include the Quadruplex wire transmitters.) Probably Mr. Marconi has perfected the only practical system and he has been able to send two messages at the same time on a single aerial a distance of about 190 miles. Not only were the messages sent upon one aerial, but the reception was accomplished in the same manner. No results have been published for some time relative to the development of the Duplex Wireless Telegraph system by Mr. Marconi, but it is hoped that, like his other works, any attempt he may make in the future will prove successful.

Digitized by Google

A very powerful wireless station was erected by the Wireless Telegraph Company of Germany at Nauen, near Berlin, whose tower was about 600 feet above ground. During a gale in March, 1912, this magnificent tower was completely wrecked. Very powerful high frequency currents are developed at this station, it having been reported that currents of 70 amperes are not uncommon upon the aerial circuit. The system employed is that installed by the Telefunken Wireless Telegraph Company. Reliable reports state that the tower will be rebuilt.

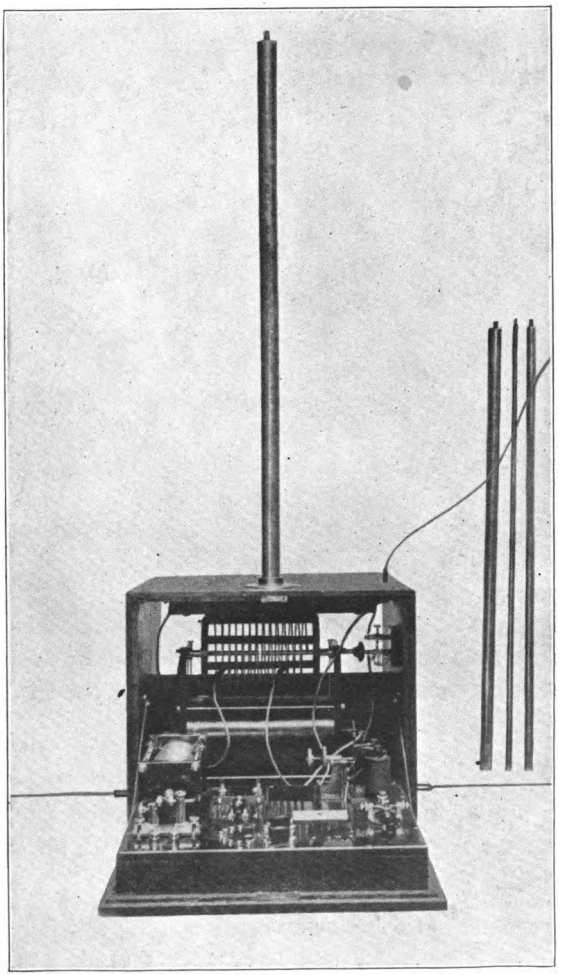

Fig. 8.

Digitized by Google

Portable Sets.

Combinations of receiving and transmitting sets have been manufactured by various companies, designed to have a small range, be extremely portable and quickly set up. Fig. 8 shows a portable set on the right of which are seen jointed sections of a

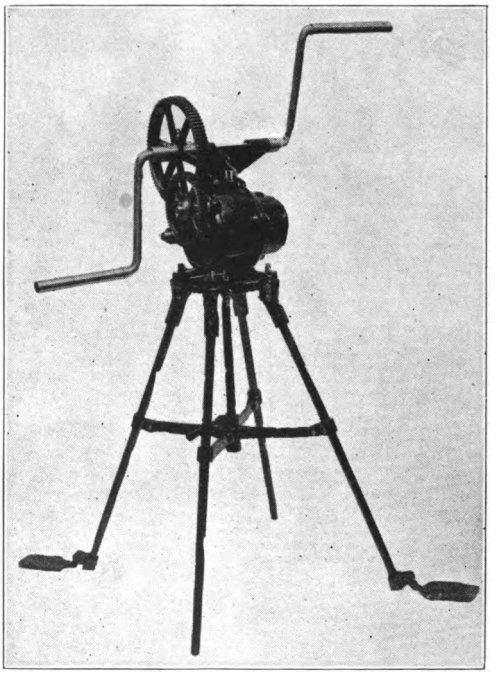

Fig. 9.

small aerial support. Power for these sets is sometimes supplied by an arrangement as shown in Fig. 9, which uses hand power to drive a small dynamo which supplies current used in the transmitter.

Call Letters of Stations.

For the sum of fifteen cents, a call book, revised semi-annually, can be purchased of the Bureau of Printing and Engraving, Washington, D. C.

French Government Eiffel Tower Station.

The plant described here is one of the highest power stations in the world. It was installed recently by the French Govern-

Digitized by Google

ment for the army at a cost of several hundred thousand dollars at the top of the Eiffel Tower, about 1,000 feet above the ground. Reliable reports say that this station has exchanged messages with the Marconi Co. station at Glace Bay in Canada, a distance of about 7,000 miles.

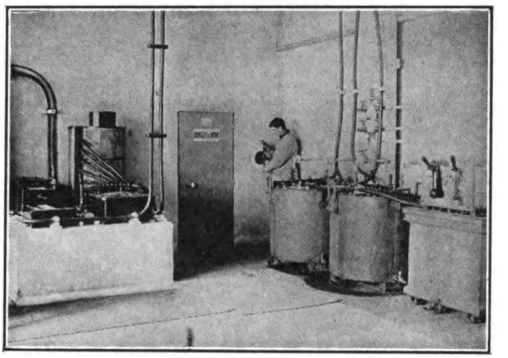

Fig. 10.

Fig. 10 shows where the high tension current is produced. The walls of the room containing the apparatus are covered with a thick layer of felt in order to deaden the noise made by the spark gap.

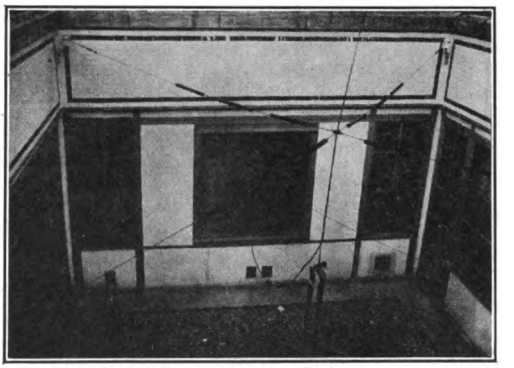

Fig. 11.

Fig. 11 shows the leads to the aerial, which on account of the high power used, are brought into the station in a very peculiar manner — the metal doors making the connection with the different parts of the wireless apparatus, and which must be closed when the transmitter is working.

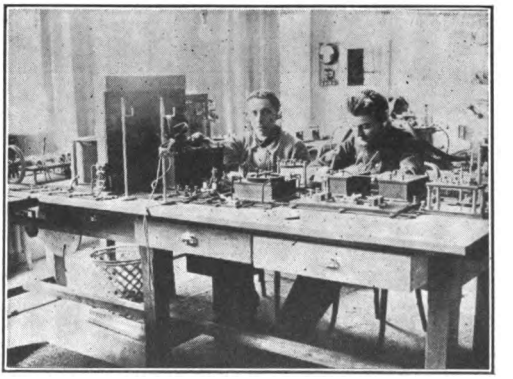

Fig. 12.

Fig. 12 shows the receiving room. The system of tuning used at this station was invent-

Digitized by Google

ed by the commander of the military post, and enables four different operators to receive at the same time. In Fig. 13 we get a view of the apparatus in the condenser and transformer room, while Fig.

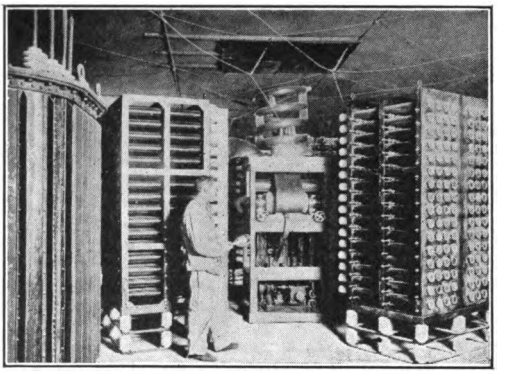

Fig. 13.

14 shows an operator in the act of turning on the current for transmitting.

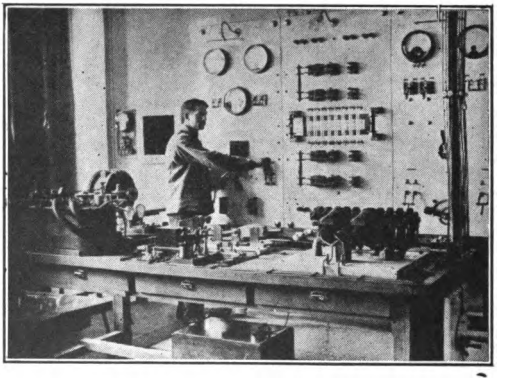

Fig. 14.

Figs. 10, 11, 12, 13 and 14 by courtesy of the Sampson Pub. Co., of Boston, Mass.

Digitized by Google

CHAPTER XV.

Wireless Telephony.

The apparatus employed in wireless telephony is similar in many respects to that employed in some systems of wireless telegraphy. However, damped oscillations can not be used in Wireless Telephony. This is explained when we remember that when damped oscillations are generated, the trains of waves produced are separated a distance which depends upon the velocity of the waves, the number of waves in a train and the number of sparks per unit time of the condenser. If we would attempt transmission of sound effects by damped oscillations, it would be possible that the air vibration producing the sound might be taking place at a time when there were no wave trains being radiated by the transmitter, consequently a distortion of the sound would be produced, there being no waves to propagate the sound effect. Also trains of damped oscillations would produce sound in a distant telephone receiver connected about a detector which would be similar to the sound produced in the receiver by the ordinary spark system signals. This would obviously drown out any other effects.

One of the problems of wireless telephony is, then, to produce undamped oscillations which can be varied in intensity, these variations producing the desired effects in our receiver.

Numerous appliances have been designed to produce undamped or nearly undamped oscillations. R. A. Fessenden has constructed alternators of extremely high frequency. The arc method of undamped wave generation is advocated by V. Poulsen and E. Ruhmer. As the human ear is capable of detecting any air vibrations at a frequency up to 20,000 per second, it would be unwise to attempt propagation of speech or sound effects by electromagnetic waves which themselves were at a frequency lower than 10,000 cycles. That is, most people would be able to hear the effects of electro-magnetic waves in a receiver at a frequency of 10,000 or below. Therefore, it is essential that if an alternator is used it should give a current having a frequency not less than 10,000 and advisedly higher.

Mr. Fessenden in 1908 constructed a high frequency alternator

Digitized by Google

coupled direct to a DeLavel steam turbine which had an output of about 2½ Kilowatts and gave a current of 225 volts at a frequency of 75,000. On account of difficult mechanical construction, alternators for extremely high frequencies are rare, inasmuch as this frequency current has not found application for commercial power or lighting purposes. Consequently the production of an alternator of this capacity at such a frequency is indeed an achievement.

The arc method of oscillation generation was described in Chapter XI. The arc generators used by the Federal Telegraph Company operated under the Poulsen patents generate undamped oscillations and conversation has been held wirelessly by this company a distance of over 300 miles.

To date the arc system seems to have found wider application than the alternator method and improvements have been made upon the arc generator by Mr. Poulsen which places wireless telephony well above the experimental stage. Chiefly, his experiments consist in eliminating the water-jacketed box containing the electric arc and substituting alcohol vapor for illuminating gas in the arc chamber. The alcohol is supplied to the arc chamber drop by drop

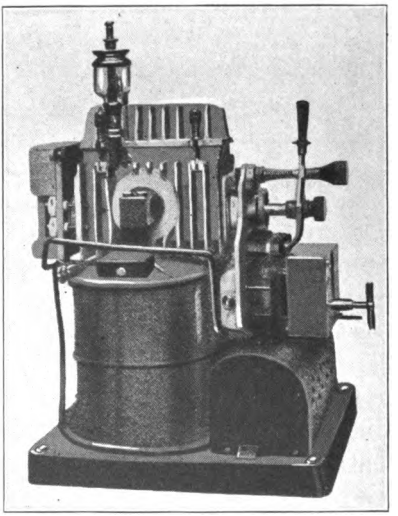

Fig. 1.

by means of a sight-feed lubricator which may be controlled either by hand or mechanical devices. Small arcs are now constructed

Digitized by Google

operating with an electro-motive force of 250 volts and drawing from 1 to 5 amperes. Fig. 1 shows a Poulsen arc transmitter. The source of alcohol supply may be seen on the top of apparatus while powerful electro-magnets, seen at the bottom, permit the arc to operate in a powerful transverse magnetic field. The current of the arc is regulated by the distance which separates the carbon and copper electrodes. This distance may be adjusted by hand or automatically by specially designed apparatus. In the ordinary direct current arc lamp for commercial lighting, the positive carbon forms a crater on its active end and the negative carbon a small cone. It has been found that if this takes place in an arc generator, no oscillations are produced, but if the carbon electrode is rotated slowly the arc forms no crater. The other or negative terminal of the arc is constructed of copper, having a water-jacket around it, the water being kept in circulation by the heat of the arc. The oscillation circuit of this transmitter consists of a variable inductance in the form of a wire helix and a capacity made by a variable condenser constructed of metal plates immersed in insulating oil. The helix and condenser are joined in series and their terminals connected across the arc electrodes. The helix forms the primary of an oscillation transformer whose secondary in the open circuit should be capable of very loose coupling. It is important that the capacity of the oscillation circuit should be small and the inductance comparatively large. Considering the capacity in electro-static units and indutance in centimeters, their ratio should be at least as 1 to 20.

It has been found that very good results can be obtained by doing away with the illuminating gas and magnetic field and in their place connecting a number of arcs in series in an atmosphere devoid of oxygen. This type of gap was described and is shown in Fig. 2, Chapter XII. Any arc to generate good oscillations must be kept steady, that is, draw current of a constant value.

E. Ruhmer has patented many appliances for wireless telephony, one of his oscillation generators using a high tension direct current at 2,000 volts to establish an arc between electrodes of aluminum. The aluminum is in the form of square sectioned wires wound upon insulated spools which are rotated and brought to a position which separates them at one place a very short distance. Mr. Ruhmer reports that this arrangement of arc when shunted by an oscillation circuit of proper dimensions, produces practically persistent oscillations upon an inductively coupled antenna.

Digitized by Google

Although far from perfection, these undamped oscillation generators give promise of a future for wireless telephony.

Microphones.

Another very serious problem in Radio Telephony is the construction of a Microphone. This instrument serves the same purpose as does the transmitter of our ordinary telephones.

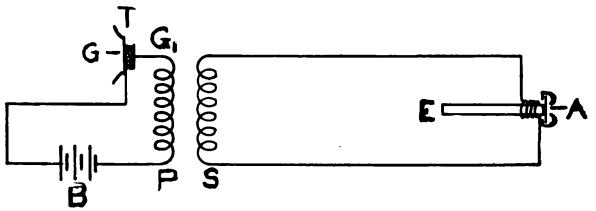

Fig. 2.

Fig. 2 is a diagram of connections for a simple wire telephone. T is a transmitter consisting of two metal diaphragms G and G' between which granules of carbon are loosely held in contact, B a battery, P the primary of a small induction coil, S its secondary connected to the coils of an electro-magnet, E in front of which is placed a magnetic diaphragm A. When words are spoken against the diaphragm G, it is caused to vibrate and varies the pressure of G on the carbon granules, thus changing the resistance of the circuit including the battery and primary P. These vibrations of current set up varying E. M. F. in the secondary S connected to the electro-magnet coils E, the diaphragm A will move back and forth the same number of times as did G and produce air vibrations which correspond exactly to the air vibrations impressed upon G. Thus conversation is made possible by telephony.

Now, if unmodified electric waves are radiated by an antenna, a transmitter placed in the antenna circuit can be made to modify these waves by means of its varying resistance when its diaphragm is vibrated by speech. These modifications being within the limits of audibility, will affect a detector and thereby reproduce themselves as speech in a telephone receiver. However, a transmitter for the purpose must be capable of carrying heavy currents, and its resistance must not be high. To obtain these essential conditions is a serious problem. Several microphones can be connected in parallel and arranged to be operated by a common mouthpiece so that their diaphragms are affected simultaneously. Poulsen inserts his microphone transmitter either in the condenser circuit

Digitized by Google

of the arc generator or in a circuit connected as shown in Fig. 3. Where the power applied to the circuit is small, the microphone may be placed in the circuit of the electric arc itself in which posi-

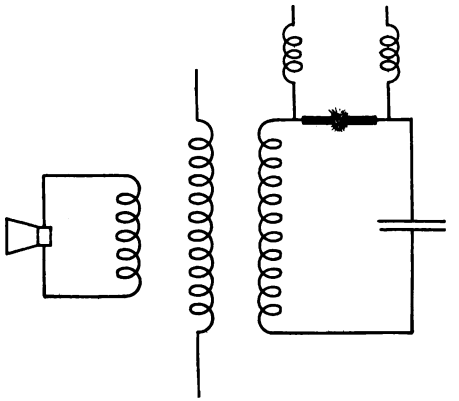

Fig. 3.

tion it varies the strength of the current upon the arc, thus varying the amplitude of the wave radiated by the transmitter.

The difficulty usually experienced in the construction of these microphones arises from an attempt to make them similar to the ordinary carbon transmitter in use in our commercial telephones which are unable to carry more than one-half ampere at about twelve volts without either heating up or sparking. A. F. Collins invented a microphone in which the usual carbon granules are contained in a receptacle, the opposing sides of which form the diaphragm designed to be set in motion by air vibrations. Two polished carbon surfaces are on the back of these diaphragms which hold the carbon granules in place. To a mouthpiece is attached two tubes of equal length, each leading to a diaphragm. When words are spoken into the mouthpiece the variations in air

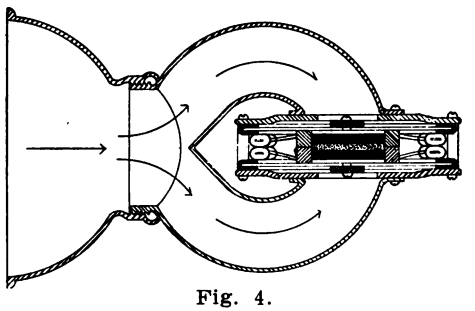

Fig. 4.

Digitized by Google

pressure are communicated simultaneously to the two diaphragms, causing them to be moved in and out together. The carbon granules are thus squeezed together when the diaphragms move toward each other. The plan of this microphone is shown in Fig. 4. Several of these Collins transmitters may be connected in multiple if large currents are used.

Receivers for Radio Telephony.

Any receiver employed in wireless telegraphy (except the recording receivers), whose circuits can be loosely coupled, can be used in wireless telephony if an oscillation detector is employed which is effected by waves proportionately to their amplitude. The electrolytic detector answers this description but mineral rectifiers can be used and are nearly as efficient. The glow lamp (Fleming or Marconi Oscillation Valve) detector seems to have been a favorite one with DeForest, Collins and others in their wireless telephony experiments.

Results Obtained in Radio Telephony.

On account of stock manipulations in the past, the real achievements in wireless telephony seem to have been given more publicity than they deserve. The difficulties which have arisen in the attempt to transmit signals by wireless telegraphy are fast being eliminated while those which have arisen in radio telephony, puzzling and annoying to experimenters, are almost as numerous as they were several years ago. Reliable reports as to distances over which conversation has been carried on by wireless telephony have been lacking. Conservatively, 400 miles is probably the limit to date. Fessenden reports that by using a transmitting antenna 200 feet in height at New York and his tower 400 feet high at Brant Rock, the 200 miles separating these two points was spanned by wireless telephonic communication with an expenditure of 200 watts. Much must be accomplished in development of microphones and generators before wireless telephony will be a commercial success. The installation cost of two wireless telephone stations at present is much greater than for a wire telephone system covering the same distance and it is contended by several wireless engineers that even with microphones and generators operating much more efficiently than at present, wireless telephony employing the undirective systems can never hope to compete with wire telephony. However, there is a field for wireless telephony in marine work and

Digitized by Google

as telephonic communication has not been held successfully through long submarine cables, this opens up another field which will doubtless lead to the development of wireless telephony permitting transatlantic conversation.

Digitized by Google

CHAPTER XVI.

Wireless Operating.

To become a successful wireless operator one must first of all know the principles in a general way under which wireless telegraph communication is made possible and he must be able to apply this knowledge in using the instruments given him. A thorough knowledge of the telegraph code is, of course, essential. Whether it be the Continental or Morse will depend upon where he wishes to operate, the Continental code being used to a great extent upon the Pacific coast, the Morse upon the Great Lakes and both the Morse and Continental upon the Atlantic. An official of a certain company once remarked to the author that, "fast operating is not necessary at the present time. Rather, an operator should be able to adjust his instruments and particularly his receiving set including tuning coils and detector rapidly and accurately; that is, an operator should be able at all times to hold communication over the distances over which his set is expected to work."

The following suggestions may prove beneficial to the inexperienced operators.

All connections should be thoroughly inspected before an attempt is made to transmit signals. See that aerial and ground circuits are complete. Ascertain if there be any loose connections or broken wires between the aerial switch and receiving instruments and if found remedy immediately. Provide yourself with tested crystals if mineral detectors are used. In fact, inspect your set in such a way that if anything be lacking or wrong there will be time before the boat leaves port to obtain the missing parts or to make repairs.

Always start a motor generator set slowly. An attempt to start too quickly will blow fuses, necessitating renewals and a waste of time.

After leaving port make up your "OS" report and give it to the nearest land station. Whether this be in the regular form of a message sent deadhead addressed to the ship owners or their agents and signed by the captain, or whether the operator merely informs the land station that his boat left port at a certain time

Digitized by Google

will depend upon custom. This can be found out by asking the chief operator or the operator at the land station receiving this report. If the report is in the form of a message, it usually is sent as follows:

HR No. 1 DC QN CK DK
Fm Str Iowa 14
To Goodrich Transportation Co., Chicago.
Str Iowa left Chicago dock 815 PM passed light
835 PM Northbound (Sig) Captain Smith.

A brief form of the above usually adopted would be as follows:

HR No 1 DC QN DH
Fm DC 14
To G T Co
GO.
DC left GO dock 815 PM past lite 835 PM NB
(Sg) Capt Smith

If the report be a simple OS, the operator should call the land station briefly as follows—GO GO GO 3 DC. When the land station (GO) gives permission to the operator on ship whose call is DC to send the report he does so in the following manner—DC DC DC GA 3 GO, upon which the operator on board ship DC will respond as follows: GO GO OS DC left GO dock 815 PM past lite 835 PM NB 3 DC If the operator at GO station received this report in a satisfactory manner he will call the boat DC DC OS OK DE 3 GO. In the cases cited GO is the call of the land station, DC of the boat station, QN the personal sign of the boat operator and DE the personal sign of the operator OK-ing the OS. If the message were sent and if successfully received at the land station, the receiving operator will signify by calling the boat, giving the number of the message, the letters OK, his personal sign and the "sign off" as follows:

DC DC No 1 OK DE 3 GO. This closes the transaction. The letters signify that the boat is north bound and the ship operator should always include some letters or words in the "OS" which will tell the receiving operator which general direction his ship is taking.

If a message was sent as described and the land station operator was unable on account of interference or static to make out a part or the whole of the message, he will then call the boat and tell him to go ahead (using the letters "GA") the last word he was able to understand and stop at the word or place in the mes-

Digitized by Google

sage he was successful in recording. Suppose in the message cited above, interference broke in at the period in the message (there should be only one period in a message and this should be immediately after the address and between it and the body of the message, unless the period is counted as a word and paid for as such in a paid message), and the receiving operator at the land station was able to pick up the thread of the message at the word "light". The land station operator would then call the boat—DC DC 9 9 GA period stop light 3 (or sometimes 30 instead of 3 is used) GO. The period should always be given in the telegraphic code and not spelled out. The figure 9 or 99 signifies that the receiving operator was interfered with. The boat operator will then call the land station GO GO next making a period in the telegraphic code and going ahead with the body of the message which was "DC left GO dock 815 PM past lite" and then will sign off 3 DC. *Never give more than the operator asks for.* Had the receiving operator at the land station missed the part from the check to the period, received from the period to "dock" successfully and missed the remainder of the message to the signature, he would have called the boat and stated as follows— DC DC in your No 1 GA CK stop . (period) GA dock stop sig 3 GO. Operator upon ship DC will thereupon obey these instructions and after calling the station will give him the portion of the message missed by the land station operator—"GO GO In No 1 ck DH Fm DC to G T CO GO." The boat operator will not repeat the portion of the message between the period and the word "Dock" but will then continue from the word dock—"dock 815 PM passed light 835 PM NB sig". In any case, where a word is missed in a message whether by land or ship operator the procedure is the same and the operator should be as brief as possible and yet explain fully to the receiving operator what portion or portions of the message were not successfully recorded.

Never attempt to hold communication with another station without first adjusting the detector and "listening in" to ascertain whether or not there be stations working whose communication your sending would break up. If an operator does not observe this rule he will lose time not only for himself but for other stations as well.

If an attempt is made to get the attention of another station by calling briefly and the operator can hear no answering "GA" from the station called, he should then examine his instruments,

Digitized by Google

particularly his detector and telephone receivers assuring himself that his detector is in adjustment and his telephones properly connected to the receiving apparatus. Then he should *tune*. That is, he should adjust his receiving instruments to the proper wave length. If the wave length of the station called is not known, the operator should tune until he is sure that no other station is working. If a set is properly equipped, this condition could not last for any length of time and it is when nothing is heard that an operator should be especially vigilant. If the instruments prove to be in good condition after a thorough inspection has been made the operator may again call the station in the same manner as he did the first time. However, there should be an interval of at least three minutes between these calls. There are several conditions which might have made it impossible for the operator at the station which was called to answer. He might have been receiving from a station which the boat operator who called him could not hear. In this case a brief call by the boat operator would not cause as much interference as a long one. He might have been busy on the telephone or any number of other things might have happened to prevent his answering the ship operator immediately. In most cases, the three minutes which elapsed between the calls of the ship station would have given the land operator time to finish the business at hand. If stations are separated a great distance and signals are weak, a long call might be advisable.

When an operator has business to get off he should do so with all possible expedition. Delayed messages mean poor service and an operator is judged by the manner in which he handles his business. If static is heavy and communication with the land station carried on with great difficulty, ascertain if there be some other ship between you and the land station and if so give your business to the operator on this ship, asking him to relay it for you. *Do not give up.*

There is no excuse for an operator coming into port upon a ship from which no report has been received on account of blown fuses on the transmitting set. Cases have been known where it was more than commonly important that reports be received from a certain ship and which were not received on account of the wireless operator either not having sufficient energy to replace blown fuses or knowledge to do it. Either is inexcusable. Inspectors hear complaints in such cases that the operator had no fuses. Fuse

Digitized by Google

wire is not the only conductor of electricity and blown fuses could at least be replaced temporarily with copper conductor of sufficient size to carry the current. When the motor will not start, the circuit should be traced and the open switch or blown fuse located. Either of the latter conditions might be located in the engine room of the ship and if so, the operators should ask the engineer if he may close the switch or renew the fuse.

Politeness will gain more favors for the ship operator than can be obtained in any other way. A wireless operator aboard ship is the sole representative of the Wireless company for whom he is working and he is responsible for the esteem in which not only he but his company is held. He is given the position to fill, not to honor himself by, and in all probability there were several operators holding this particular ship position before him. He is not a passenger and should not mix with them. If asked a question relative to his business, he should answer it politely and briefly; if relating to the business of the officers of the ship, refer the person desiring information to the proper officer who has jurisdiction over that portion of the ship concerning which information is desired. Unless specially appointed, the wireless operator is in no way an officer of a ship upon which his station is located. Learn ship rules and observe them, and be willing to do the work for which you are hired,—*give the ship good wireless service.*

Learn the schedule of the ship upon which you are working. No wireless operator is expected to be on duty twenty-four hours daily, and if the ports are learned, his time can be so divided that wireless operating on board ship can be made a pleasure.

Never finish calling a station, sending a report, or a message without using the letters 3,30 or 33. Any of these figures means "I am finished and listening". Likewise, do not start sending until the operator at the other station has given you a 3,30 or 33. Failure to use these universal "sign off" characters means loss of time.

Do not hold useless conversation with other operators. If information is desired and necessary, ask for it in as concise a manner as possible.

Do not send faster than you can receive. It is better to send a message at a moderate speed *once* than fast twice. Excessive speed in sending is conducive to mistakes by both the sending and the receiving operator, and one error may take almost as much time to correct as was consumed in sending the entire message. An

Digitized by Google

uncorrected message if delivered, may cost the company for whom you are working many times the amount received for transmitting it and finally it may cost you your position.

Do not use the transmitter when your ship is being piloted through a river or harbor or at any time when the officers of the ship on the bridge or in the wheelhouse are obliged to use the Engine-room Telegraph frequently, as induced current from the aerial upon the wire connecting the engine-room and wheelhouse or bridge in the majority of stations is sufficient to give the person coming in contact with the wires an extremely unpleasant if not actually dangerous shock.

Do not use sparks of excessive lengths. Long sparks cause heavy induced currents on the ship's dynamo circuits, break condensers, and are a strain upon the whole transmitting apparatus.

If a condenser dielectric is ruptured, replace the unit destroyed or if no extra ones are supplied, cut it out of the circuit and work without it.

Clean the sliding contacts upon the receiving apparatus *daily*. Dust and grease accumulating upon slider rods and tuning coil wires may cut down your normal receiving range fifty per cent. *Never oil or vaseline the contacts.*

Keep your motor generator set in good condition, see that the bearings are properly oiled, dust it off occasionally, examine all connections for loose wires. Do not run your motor at half speed by leaving the arm on the starting box half over, as this action will sooner or later burn out the box.

On damp days or in early morning, moisture may gather upon the set and materially lessen both the transmitting and receiving range. Wipe off with a dry cloth. As any electrical discharge in air will produce water, the spark case may become so damp after standing over night that the spark will not jump the gap, but will cause the moistened sides of the muffler to conduct the current which may char the case and cause trouble. If a hesitancy to spark is noticed, decrease the spark length and expel the moisture by the heat of the spark. If this is unsuccessful, wipe out the case thoroughly.

Examine the aerial occasionally to see that no stays are loose, lines frayed, or leads to instrument room grounding or liable to ground upon some portion of the ship. Hot gases from the stack have been known to burn aerial wires and spreaders in two. If this

Digitized by Google

is noticed in time, advise the proper officials of the Wireless company and procure new parts.

Rough treatment will ruin the best telephone receivers manufactured. When through using wireless receivers, hang them up carefully and in such a position that the cord cannot fall across high tension lead. Every operator should posses an extra pair of telephone receivers.

Never use the universal distress signal "S5S" unless positively necessary. Its use for other purposes is prohibited by law.

Make it unnecessary for another station to call your station more than once. When a land station wants you, it is important or the operator would not call you. You cannot be on duty and your receivers on the hook, your tuning apparatus not correctly adjusted or your detector out of adjustment. You signified your intention to give the ship as good wireless service as possible by accepting the position as operator. If you think yourself deserving of a better position or salary, *let your work prove it.* Attention to details will keep you busy and be the means of developing your operating ability.

Digitized by Google

APPENDIX.

TELEGRAPH CODES.

MORSE.

Letters.

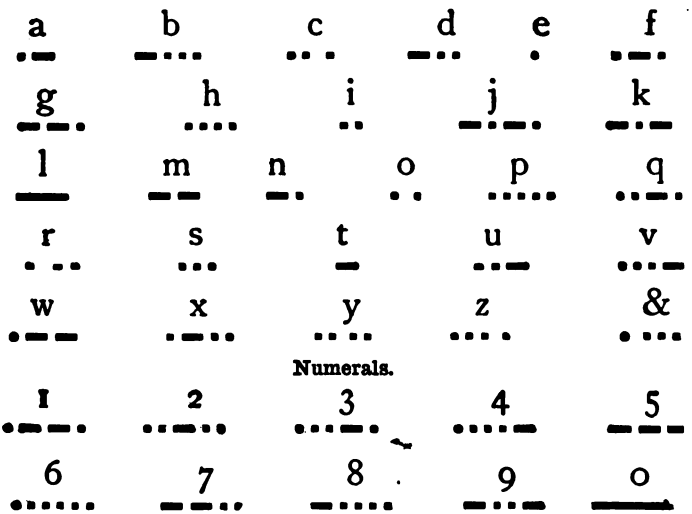

Numerals.

Punctuation, Etc.

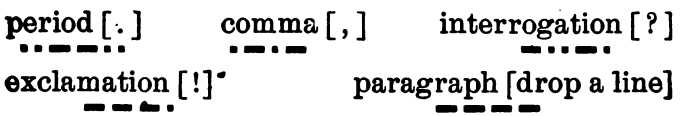

Digitized by Google

MORSE ABBREVIATIONS.

colon [:] — colon dash [:—]

colon quotation [: "] — semi-colon [;]

hyphen [-] — dash [—]

beginning quotation ["] — ending quotation ["]

apostrophe ['] or quotation within a quotation [" ' ' "]

beginning parenthesis [( ] — ending parenthesis [ )]

brackets ([ ]) — capitalized letters

italics or underline

dollars [$] — cents [¢]

decimal point [.] — pound sterling [£]

shilling mark [/] — pence [d]

Digitized by Google

CONTINENTAL CODE.

Letters.

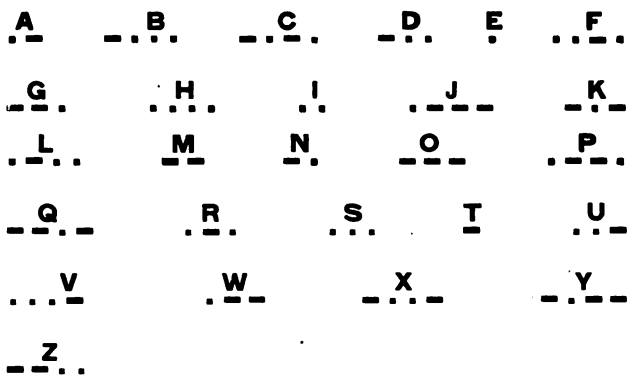

Numerals.

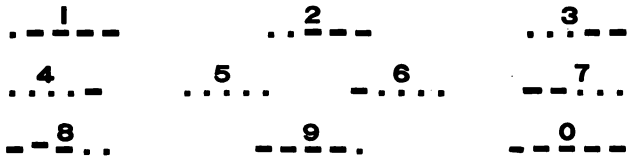

Punctuation, etc.

Digitized by Google

INDEX.

A

Aerial, Classes of 180, 181, 182
Conductors 183
Inductively connected 183
Insulation and Insulators 186, 187
Plain 103
Supports 182
Switches 190, 191
Advantages of Arc-System 167
Air, Limits of 5
Aluminum for Aerial Conductor 184
Alternating Current Dynamos 37
Ampere, Definition of 26
Turns 22
Amalgamated Zinc 14
Anchor Gap, Use of 160, 198
Arc Generators 161, 212
Thompson's 161
Poulsen's 162, 212
Armatures 40
Ringwound 40, 41
Drumwound 41
Austin, Dr. A. W., Telephone Sensitiveness 109
Aylmer and Small 23

B

Battery Connections 29
Rules 30
Bellini and Tosi, Directive System 190
Break-in Systems 205, 206
Brushes 36

C

Call Letters 208
Capacity of Aerials 189, 190
Capacity, Measurement of Small 95
Capacity, Formula for 64, 68
Carborundum as Detector 110
Charges, Electrical 9
Circular Mils, Definition of 31
Cloud, Prof. J. H. 13
Clapp-Eastham Co., Receiving Transformer 146
Quenched Rotary Spark 177
Coefficient of Coupling 53

Digitized by Google

Formula for 53
Coherer, Branly's 100
Action of 101
Efficiency of 107
Collector Rings 36
Commutator 37, 38
Commercial Production of Electricity 17
Condensers, Clapp-Eastham 70
Hydro 69
Method of Charging 72
The Leyden Jar 62
United Wireless Tel. Co. 67
Conduction 11
Conductors 12
Conductance of Earth 90
Coulomb, Definition of 26
Counter E. M. F. of Motor 46
Coupling, Effect of 105
Loose and Close 52
Cycle, Definition of 37
Cymometer, Fleming 92

D

Damped Oscillation 76
Curve of 78
Daylight and Darkness, Effect on Transmission 91
Decoherer, Marconi 101
Density 22
Depolarizer 17
Detectors,
Rectifying, Action of 113, 114, 115
Silicon 111
Carborundum 110
Molybdenite 113
Electrolytic 116, 118
Theory of Action of Electrolytic 118
Magnetic 119, 120
Audion (See Fleming Valve)
Fleming Oscillation Valve 122
Perikon 111
United Wireless Tel. Co. 112
Dielectrics 62
Dielectric Constant 65
Diffraction of Ether Waves 91
Directive Aerials 187
Experiments with 188
Systems 190
Discharge of Condensers 72
Displacement Current 82
Duddell's Singing Arc 162

Digitized by Google

E

Eiffel Tower Station 208, 209, 210
Electron, The 9
Electricity 10
Electric Field 13, 86, 87, 88
Electrical Circuit 16
Resistance 26
Motor 43
Electroscope 11
Electrolyte 16
Electrolytic Effect of Current 17
Electro-Kinetics 13
Electro-Magnets 21
Electro-Magnetic Field 22
Electro-Motive Force 13, 25
Electro-Motive Force of Dynamo 40
Energy, Definition of 5
Kinetic 6
Potential 6
Radiant 7
Source of 6
Ether, The 6

F

Faults of D. C. Motor 50
Faraday 82
Farad, The 62
Federal Telegraph Co.'s Arc Generator 162, 166
Fessenden, Prof. R. 176
Interference Preventer 135
Rotary Sparks 176
Federal Telegraph Co. Station 202
Feddersen, Dr., Experiments of 73
Field Rheostats 45, 46
Flat Tunes 140
Fleming, J. H. 59
Flux, Definition of 22
Force, Definition of 5
Frequency, Definition of 37
Frictional Electricity 13
Fuses, Renewals of 221

G

Galvanometers 15
D'Arsonval 15
Tangent 15
Gravity Cell, E. M. F. of 25
Grounds 198, 199
Grounding of Charges 11
Government Reports on Fessenden Receiver 136, 137

Digitized by Google

H

Helix, Inductance of 59
Ten Turn 70
Henry, The 57
Henry, Prof. Jos., Theory of 73
Hertz's Experiments 97
Oscillator 97
Resonator 99
Horse-Power, Definition of 27
Hot Wire Ammeters 196, 197
Hydro Condensers 69
Hysteresis 60

I

Inductance of Straight Conductor 57
Inductance, Calculation of 58
Inductance, Formulas for 58, 59
Inductance of Helix 58
Inductance, Measurement of Small 95
Induction 12
Induced Electricity 12, 52
Induction Coil 53
Inductivity, Table of 65
Inertia, Definition of 5
Insulators 12
Interrupters 54, 55, 56
Image Theory, The 89
Impedance, Definition of 59
Importance of Meters 195

J

Jenkins, W. C., on Storage Batteries 28
Jiggers, Marconi 140

K

Kinetic Electricity 13
Energy 6
Kilowatt, Definition of 27

L

Law of Electric Charges 10
Lepel Arc 172
Leyden Jar, The 62
Lightning Switches 191
Linear Oscillator 84
Lines of Force 12, 13
Limits of Magnetic Field 19
Lord Kelvin 73
Losses on Spark Gap 79

Digitized by Google

M

Magnetic Effect of Current 17
Magnetic Material 19
Magnetic Field 20, 51
Magnetic Lines 20
Magnetic Circuit 23
Magnetic Attraction 19
Magnetic Repulsion 19
Magnets 19
Magnetism 19
Magneto-Electric Machines 42
Magneto-Motive Force 22
Magnetizing Force 22
Material for Condenser Coating 72
Matter, Definition of 5
Marconi, Experiments of 100, 102
Coherer 100
Disc Discharger 153
Improvements on Transmission 101
Lecture on Wireless Telegraphy 203
Multiple Tuner 141, 142, 143
Wave Meter 94
X-Stopper 132
Maxwell's Displacement Current 82
Megohm, Definition of 26
Micro-Ohm, Definition of 26
Microphone for Wireless Telephony 214
Collin's 215
Micro-farad 62
Mil, Definition of 31
Molecules, Definition of 5
Motion, Definition of 5
Motor-Generators 44, 45
Mutual Induction 52

N

Nasmyth, Formula of 165
Navy Rules for Care of Equipment 200, 201
Nauen Station 207
Neon Gas 93
Non-Conductors 12

O

Ohm, Definition of 26
Ohm's Law 27
O. S. Report 219
Oscillation Valve 122
Constant 93, 95

Digitized by Google

P

Pancake Tuner 150
Period, Definition of 81, 125
Formula for 81, 99
Permeance 23
Permeability 20
Permanent Magnets 20
Physical Effect of Current 17
Phosphor Bronze Aerial Wire 184
Pierce, Prof. G. W., References to 82, 103, 105, 164
Pickard, G. W., Telephone Receivers 109
Detectors 110
Plain Aerials 103, 114
Polarization 16
Polarized Molecules 21
Popular Electricity 28
Portable Sets 208
Potential Difference 9
Electric 9
Poulsen Ticker 166, 167
Arc 162, 212
Power, Definition of 27
Primary Batteries 28

Q

Quantity of Electricity 71
Quenched Rotary Spark 177
Quenched Spark Gaps 173
Quenched Spark, Action of 174

R

Radiation 7
Radiators 6
Radio Telephony, Results of 216
Radio Telephony, Distances Covered by 216
Reactance, Definition of 59
Receiving Circuits 125
For Fleming Valve 124
Fessenden 134, 135
For Radio-Telephony 216
Marconi Valve 140
Marconi Multiple Tuner 143, 144
Shoemaker 130
Stone Weeding Out 134
Reflection of Ether Waves 91
Relay, Use of, in Radio-Telegraphy 101
Reluctance, Definition of 23
Reluctivity, Definition of 23
Renewing Crystals 112

Digitized by Google

Residual Magnetism, Definition of 23
Resonance of Receiving Circuits 106
Resistance of Conductors 31
Retentivity 23
Robinson, Lieut.-Comm., Reference to 139
Rotary Spark Gaps 176
Ruhmer, E., Patents 213
Rules for Direction of Current, Motion and Lines of Force 34
Ruhmkorff Coil 53

S

Secondary Batteries 28
Sending Keys 193
Self-Induction 56
Separately Excited Dynamo 42
Series Dynamo 43
Shoemaker Transmitter 71
Shunt-Wound Dynamo 42
Shunt Circuits 30
Silicon Detector 111
Skin Effect of H. F. Currents 184
Slip Rings 36
Snow Rule 34
Spark Frequency 160
Spark Gaps 103, 169, 170, 173, 176
Specific Resistance, Table of 26
Starting Box 46
  Cutler-Hammer 48
Static 131
  Electricity 13
  Machine 13
Strength of Current 25
Symbols for Electrical Units 27
Steinmetz on Hysteresis 60

T

Table of Aerial Capacity from Fleming 190
  Dielectric Constants 65
  Dielectric Strength of Material 63, 64
  Copper Conductor 32
  High Frequency Resistance 185
  Lines of Force 24
  Transmission over Land, Sea, etc. 91
Tapper, Electro-Magnetic 101
Telegraphy, Ether Wave 8
Telephone Receivers 109
Telefunken Arc 171
  Non-Sparking Key 194
Tesla, Nikola, Experiments of 99
Thermal Effects of Currents 17

Digitized by Google

Thompson's Equations 80
Towers 182
Traction of Magnets 23
Transmitter 147
Directly Connected 147
Inductively Connected 147
DeForest 152
Shoemaker 149
Telefunken 151
U. W. T. Co. 148, 149
Transformers 154
Action of 157
Efficiency of 158
Closed Core 155
Marconi Co. 160
Open Core 155, 159
Step-Up 156
Step-Down 156
U. W. T. Co. 156, 159
Tuning, Theory of 125
Type "D" Tuner 127, 129
"E" Tuner 130

U

U-tube 79
United Wireless Tel. Co., "D" Tuner 128, 129
"E" Tuner 130
Spark Gap 170

V

Vibrations of Ether 8
Voltaic Cell 16

W

Waves, Hertzian 8
Waves 7
Length, Formula for 74, 107
Measurement of 92
Wireless Telegraph Stations 201, 202
Wireless Operating 218, 219, 220
Work 6
Zenneck, Dr., Equations of 90

Digitized by Google

Digitized by Google

DODGE'S TELEGRAPH, WIRELESS AND RAILWAY INSTITUTE

VALPARAISO, - - INDIANA

Established 1874; Chartered 1900 and 1910

LARGE ILLUSTRATED AND DESCRIPTIVE CATALOGUE FREE UPON REQUEST

The largest and most completely equipped Wire, Wireless and Railway Accounting School in the world, the annual enrollment exceeding 500 students and the investment reaching approximately $25,000.

Positively the only institution in which a student may become entirely prepared for a position as telegraph operator, aerographer or station agent. Graduates assisted to positions.

Endorsed by officials of many Railways, The Western Union Telegraph Company, and The United Wireless Telegraph Company.

The Grand Trunk Railway train dispatcher's wire and a Western Union Telegraph Company wire are installed in the school for practice of advanced students while not receiving instruction from the teachers and for practice of students, occupying rooms in the dormitory part of our buildings, outside of school hours and on Saturdays and Sundays.

Digitized by Google

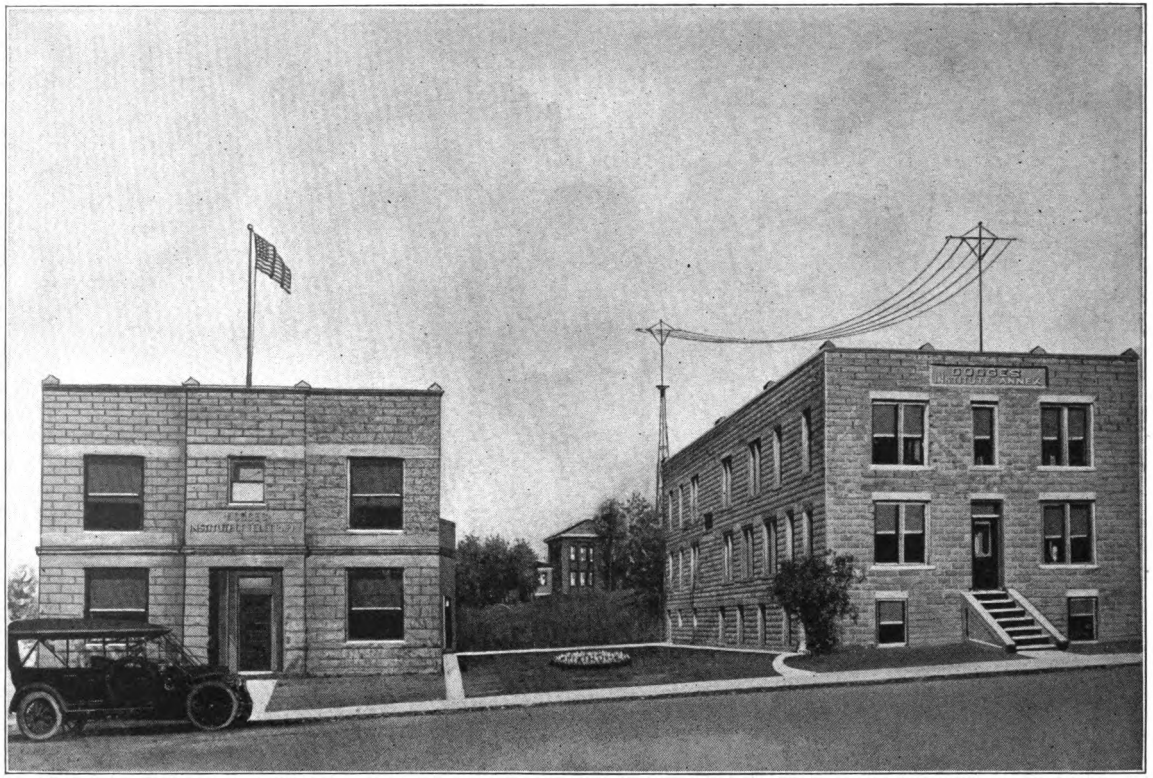

DODGE'S TELEGRAPH, WIRELESS AND RAILWAY INSTITUTE, VALPARAISO, INDIANA.

Digitized by Google

Function of the Technical School.

It is estimated that there are twenty-five millions of people in the United States engaged in gainful occupations as wage-earners.

Of all that vast army only a small percentage have had the opportunity of choosing their own lifework, or of receiving any training to fit them for it. They have simply been thrust by circumstances of heredity or of environment into the nearest position that offered.

With no consideration of capacity or natural fitness and without special training for the work undertaken, the sad but inevitable results seen on every hand could only follow: Years of slow and painful labor; the golden dreams of youth slipping away, health and strength sacrificed in the struggle against crushing odds, and opportunities of advancement lost for lack of training.

There is no room in the world today for the untrained man. Nobody wants him. Nobody will employ him except at wages which mean only a bare existence, and then only in the hard and disagreeable tasks which no one else will accept. His plight is indeed deplorable, but it is inevitable. It is one of the results of the marvelous commercial development and the systematizing of all industries. The old slow days of apprenticeship are gone. Modern business cannot wait. It must have its trained men ready for immediate service, and it looks to the technical school alone to supply its needs. The only hope of escape for the unskilled man is through the door of technical training, and that too before his life be too far spent for him to hold his own against the competition of younger men.

What We Can Do.

While we cannot change economic conditions, yet through our school, we can save many thousands from a life of hopeless drudgery in the ranks of the unskilled by giving them the training that will fit them for higher and better paying occupations.

This, in our judgment, is the function of the technical school and this, we believe, is our contribution to the world's need; just what this institution is doing year after year for the hundreds of students who receive its training.

What Will You Do?

What then, will you do? What disposition will you make of your own life? How will you invest your capital of youth and hope? Will you cast your lot with the untrained, becoming a member of the already overcrowded and hopeless mass of the "not

Digitized by Google

wanted,'' or will you put your talents to use, lifting yourself by training and preparation into the class of the capable whom the world is always seeking?

If you are now on a farm and find its opportunities too limited, its drudgery and lack of cultural influences distasteful, you may broaden your horizon and increase your earning capacity by opening the door into one of the most promising fields of American industry.

If you are a factory hand, weary of being treated as a piece of machinery; if you are a clerk in a store, subjected alike to the abuse of captious customers and the reproof of employers; or, if you are just out of school and find yourself poorly trained to fit in anywhere, yet ambitious, why not settle the question by allowing us to put into your hands the key which unlocks the gates to great opportunities, where you will not only earn good wages the entire year, but be in line of promotion to some of the best positions in the country? If you are in the ruck of the unskilled, get out of it while you may.

The Way Out.

Spend a few months at our school, which is located at Valparaiso, Indiana, forty-five miles east of Chicago. Our city is one of the most delightful small cities of America and our school is the oldest, largest and most reliable one of its kind in the world. Valparaiso is situated upon a rolling site, with paved streets and the best walks. The water, which comes from a chain of lakes three miles north of the city, has been pronounced by our state authorities as being of the purest, our sewerage system is splendid and Valparaiso is noted for its immense and splendid foliage, its magnificent public buildings and is commonly referred to as ''the city of schools and churches.'' There are splendid lakes—summer resorts—on either side and an interurban line has cars running hourly to an amusement park located at one of these lakes.

One could not conceive of a more desirable place to spend a period of time. Every environment at Valparaiso is good. Our city is near enough to Chicago to make our school easily accessible for commercial and business purposes, yet we are far enough away to make *frequent* city trips impossible.

Course of Study and Branches Taught.

The courses at this institution embrace a thorough training in: I. Morse or Wire work—railway and commercial telegraphy. II. Station Agency and Railway Accounting. III. Wireless Telegraphy and Wireless Engineering. IV. Typewriting. V. Penmanship.

Digitized by Google

Length of Time Required.

This depends in a great degree upon the student's aptitude and the application he gives the study, usually, however, six months, or a little less, is sufficient for one to become proficient in the Morse or Wire work, and the student may, at the same time, take the Station Agency and Railway Accounting course, or the Wireless telegraph course without spending any additional time. Indeed, we have observed that those who take the Wireless course quite frequently progress with more rapidity in the Wire work than those who take the Wire work alone.

The usual length of time required for one to complete the laboratory work in the Wireless Department is four months, assuming of course, that the student has received no training, such as a course in physics, as is usually given in high school. If he has had this work the time may be somewhat reduced. The course is designed for the student who knows absolutely nothing about electricity. The Morse or Wire telegrapher can usually complete in a shorter time, inasmuch as he has some understanding of electricity and has to devote but little of his time to mastering the codes.

The usual length of time required for one to complete the Station Agency or Railway Accounting course is three to four months.

The Typewriting and Penmanship courses are taken right along with the regular work and require no additional time.

Wireless Telegraphy is a Delightful Occupation.

The wages are good and the work is pleasant, instructive and intensely interesting. This new and profitable vocation offers some splendid opportunities and great possibilities. It enables those who qualify as wireless operators to travel "first-class" and see the world.

An Increasing Demand.

Since the Wireless Telegraph Act became effective, July 1, 1911, it has become necessary for a great number of the ships to install wireless service. There are bills now pending in Congress, as a result of the Titanic disaster investigation, which will demand that steamships now carrying one wireless operator have at least two and in some cases three wireless telegraphers.

This article was written in May, 1912, and a very recent communication from a prominent official of one of the large wireless telegraph companies says: "If the wireless bill now before Congress becomes a law, we can employ about 500 more licensed oper-

Digitized by Google

ators after July 1st, this year." This communication was sent to us without any solicitation, and from one with whom we have no personal acquaintance, which shows, beyond question, the splendid outlook in the Wireless field.

This is the opportune time for one to enter the promising field of Wireless.

Qualifications Necessary.

Only a very ordinary school education is necessary for one to become a successful Wire or Wireless telegrapher. Indeed, there are very few to be found in the telegraph or wireless service, who have attended college, the great majority not having gone farther in the common school work than the grammar grade. It is, of course, true that some can master the work more readily than others, but it is a fact that there are but a very few who can not learn telegraphy. With the right disposition upon a student's part, he may have but little fear that he will not become successful by taking up the study at this school.

Expenses Low.

The tuition for a scholarship in the Wire work, Railway and Commercial Telegraphy, time of which is unlimited, and which includes, free of any charge, drill penmanship and a five months' course of typewriting, is $45. The tuition for a period of three months in the Wire work is $25.

The tuition for the Wireless course alone is $30, but a rate of $25 for the Wireless work is made in addition to the tuition for the Wire work if both are subscribed for at the time of entrance.

The tuition for the Railway Accounting course (Station Agency) is $20 alone, or a rate of $15 is made in addition to the tuition in the telegraphic work, if both are subscribed for at the time of entrance.

Table board and furnished room may be obtained for $2.25 to $3 per week, most students paying from $2.25 to $2.50 per week for these accommodations. These prices do not include heat and light; the cost of the former where stoves are used is about 20c per week, and where steam or furnace heat is furnished, about 35c per week. The cost of light is nominal where lamp is used. Students occupying rooms with steam or furnace heat also have the use of bath and other modern conveniences.

A great many students reduce their expenses very materially by working for their board. Indeed, a number make more than all their living expenses by working for their board at meal times and doing odd jobs outside of school hours and on Saturdays. We are

Digitized by Google

always glad to assist students to places of this kind and have continuous calls from different boarding houses and restaurants, and citizens in general, for help of this kind.

Department of Wireless Telegraphy—Engineering.

Dean—C. I. Hoppough.

Wireless Telegraphy! Two centuries ago Shakespeare wrote of the "horseless couriers of the air," yet when just a little while ago Marconi announced to the world that he would be able to talk across the seas without wires, nobody believed him, but when the famous Jack Binns saved the lives of hundreds of passengers by the use of his Wireless set in 1909, the world suddenly awakened to the fact that the dream of the years was here.

Now, Wireless Stations are so common they no longer excite

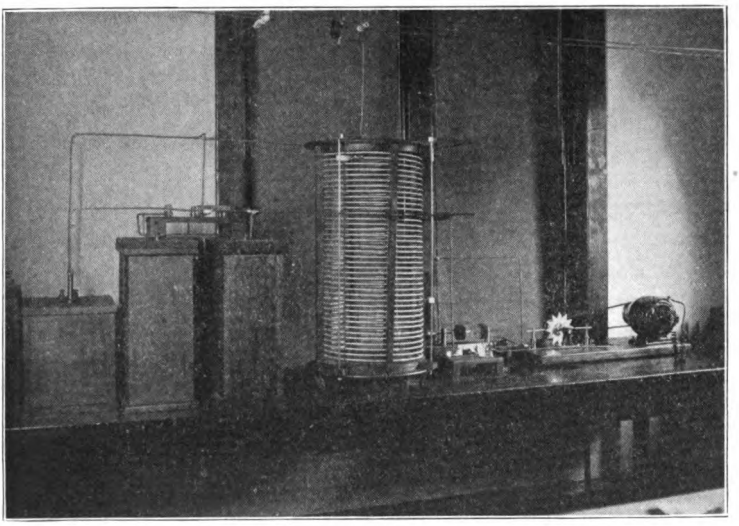

Partial View of Transmitter at Our Large Station.

wonder, while aerograms are accepted as an everyday fact along with telephone and telegraph messages. The field for Wireless is expanding with marvelous rapidity and it offers great possibilities. Very few steamships of any consequence are now without wireless sets. This applies to those upon the Great Lakes as well as those plying the waters of the ocean.

Realizing the great need of men for this field, we installed a complete training school for this work, consisting of a complete wireless station and laboratory, the 1st of January, 1910. The Department has met with unbounded success, due to the untiring efforts of those interested in the success of this Department. We

Digitized by Google

have installed two stations, one a 2 K. W. with an aerial sufficient to transmit from 200 to 250 miles and we have been enabled at many times to hear stations upon the Atlantic Coast from Newfoundland

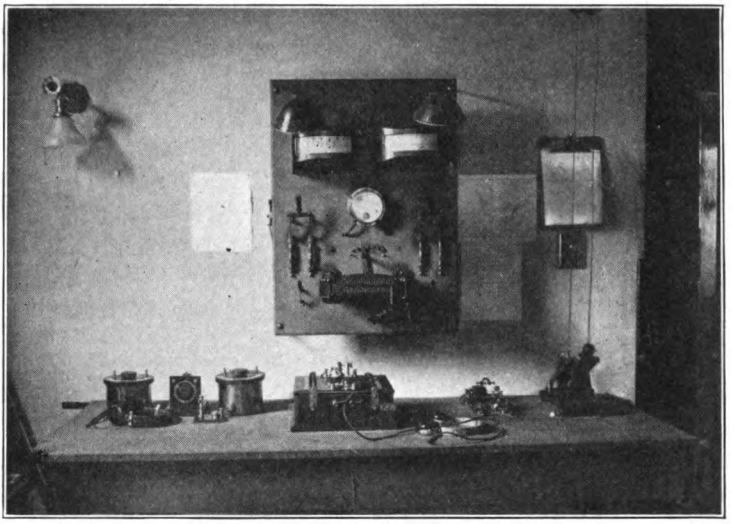

View of Transmitter Switchboard and Partial View of Our Receiving Station.

to Colon, Panama; on the Gulf Coast from Key West to Galveston, and from ships in southern Pacific waters, as well as from innumerable intervening stations. The smaller set is used almost exclu-

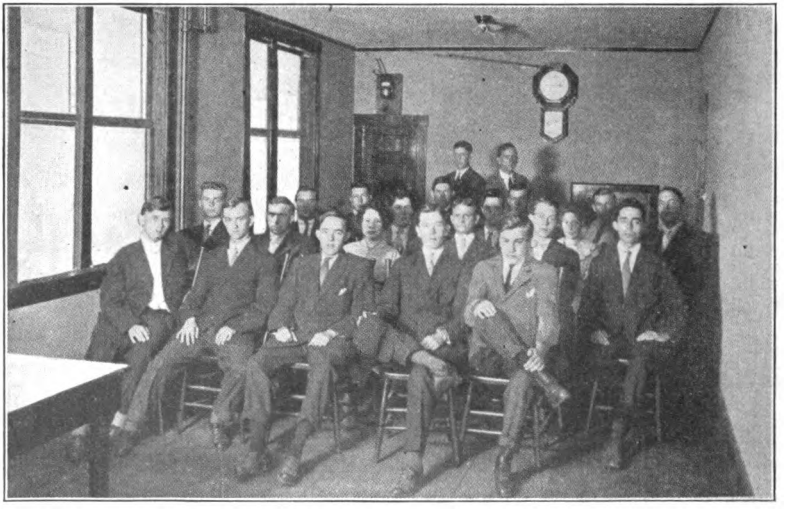

View of Wireless Recitation Room.

Digitized by Google

sively for experimental purposes. As will be appreciated, the training received by our advanced students through the use and operation of these stations, renders the course invaluable and prepares those who finish the work for handling almost any commercial station in a very satisfactory way.

The thoroughness of instruction given here enables us to make the claim, which we believe no other school of Wireless enjoys, that this Institution stands alone in that its students may become entirely qualified.

The Wireless Telegraph Act, which became effective July, 1911, makes it necessary for all wireless operators on the ocean ships, to take out a government license, and to obtain this license all applicants must pass the government examination. *Every graduate of this School to this date, May,* 1912, *who has tried that examination, has passed in a most satisfactory manner.*

The apparatus used in our laboratory is very complete. Our large descriptive catalog explains this in detail. We shall be glad to send you a copy of this upon your request.

The Dean of this Department—Mr. C. I. Hoppough—is eminently qualified, as his book, in which this advertisement appears, will confirm. Mr. Hoppough has studied electrical engineering at the University of Michigan and has taken special work along the same line at the Armour Institute of Technology. He has been interested in the field of Wireless for more than six years and has held some splendid positions as aerographer, inspector and constructing engineer for the United Wireless Telegraph Company.

Course of Instruction in the Wire or Morse Department—Railway and Commercial Telegraphy.

Among the important branches embraced in our course are: The electric current; instruments employed and adjustment of same; the battery and care of it; the switchboard, explaining in detail the functions it performs, ground wires, etc.; transmitting or sending, including correct position and movement; receiving; circuit regulation, word and numerical wire signals; abbreviations used in both railroad and commercial telegraphy; definitions of technical terms used in railroad and telegraph work; duties of railroad employees; standard railway rules; rules for the movement of trains by telegraphic orders; block signaling, with definitions; telegraph block signals; block signal examination; railroad telegrams; commercial telegraph rules as used by the Western Union and Postal Telegraph Cable companies; commercial telegrams, including service messages, etc.; Commercial Telegraph Bookkeeping; Typewriting; Penmanship.

Digitized by Google

Primary Department.

If you have no knowledge of telegraphy you are first taught

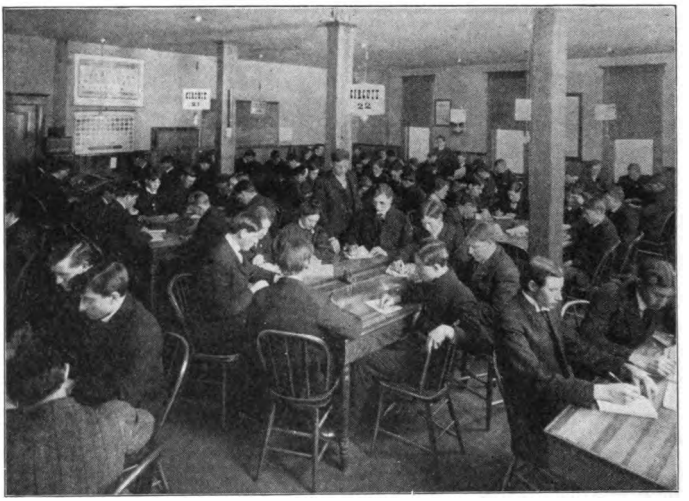

View of Beginning Primary Department.

the correct position and movement of the arm at the telegraphic key. At the same time you familiarize yourself with the telegraphic code. This requires from two to four days. You are then placed at a table with others of equal ability where step by step in this

View of Advanced Primary Department.

Digitized by Google

primary department you attain the ability of sending and receiving straight newspaper matter at a speed of about fifteen words per minute. From here you enter

The Intermediate Department,

Where you not only receive and transmit at a little greater speed, but begin the study of train orders (31) and (19), railroad messages, train schedules, standard rules of railroads governing rights of trains, railway signals, train sheets, clearance cards, block signaling, and definitions of technical terms used in the railroad and commercial telegraphic work. Also abbreviations with sentences using them in railroad and commercial telegraphy and wire testing, duties of railway and commercial telegraph operators, commercial messages, and commercial telegraph bookkeeping.

In the best grade of the Intermediate work a regular train service is conducted, where all the forms just named are used. After a thorough understanding of this work you are promoted to

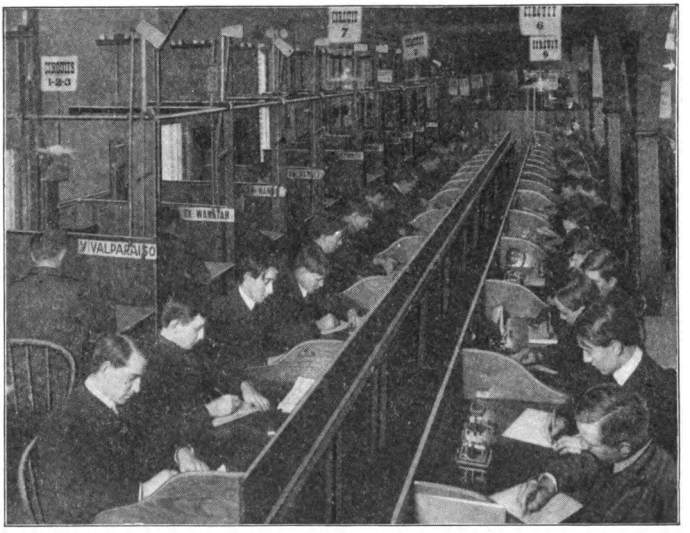

View of Intermediate and Graduating Departments.

The Graduating Department,

Which has ten well and completely equipped offices. These Graduating Offices have three wires which are grounded circuits with main line batteries with regular Western Union pin-plug switchboards, each office having a ground wire connection. All offices are equipped with semaphores, hand signals, etc. Seven of these offices have two full sets of instruments, including relay, key

Digitized by Google

and sounder and local batteries, and three of them have three full sets of instruments, one of these being equipped with a late pattern resonator, in which a sounder is incased for the reception of telegrams upon the typewriter. The semaphores and hand signals are used for the delivery of train orders and blocking of trains. Trains are represented by cards with numbers thereon, carried by the instructor, who receipts for (31) train orders and in a general way conducts the service as would a conductor of a regular train. This plan, in the opinion of many of those in a position to know, is far superior to the "toy train service," which is in vogue at some schools. Everything necessary for complete instruction is used in this work, including manifold train order blanks with carbon sheets, train sheets and commercial and railroad message blanks, and there is in fact, nothing left undone.

At the completion of this work one should be qualified to assume a position as telegraph operator with almost any railroad and with either of the commercial telegraph companies.

Note.—The work in the graduating department is not carried on at all times, by reason of the fact that a number find it possible to complete the course in the advanced intermediate department, and a very urgent demand for operators. Furthermore, a number prefer, and some find it necessary to complete their knowledge of details in an office. For these we agree to provide offices and can invariably secure them, which, besides offering the student excellent practice, will pay him more than enough to meet all of his expenses.

Besides this course of instruction which is almost of inestimable value, we have the Grand Trunk Western Railroad train dispatcher's wire and a busy Western Union Telegraph Company wire right in the schoolroom from which students receive instruction and practice while not receiving instruction from our teachers. These wires are busy ones and are a most valuable adjunct to our regular course of instruction.

The Train Dispatcher's Office.

Is supplied with four full sets of instruments with additional keys to be used by the copier, a 27-wire Western Union switchboard and three sets of testing instruments. The student who is furthest advanced is tendered the position of Copier in the dispatcher's office, while an instructor acts as train dispatcher and another instructor handles railway and commercial messages upon other wires.

Digitized by Google

Explanatory Lines.

Two lines have been erected in a practical way, upon one side of the main schoolroom for the exclusive purpose of teaching the intricate parts of the instruments, how they are connected in on a line and the manipulation of switchboards. These lines are run into three offices which for convenience are named Chicago, Pittsburg and New York. If they were to be actually erected between the places named the plan of construction and the installation of the instruments and switchboards would be practically identical. The wires receive their current through main line batteries and return the same through the ground. The equipment consists of regular Western Union pin-plug switchboards, two full sets of instruments at each office (key, relay and sounder), local batteries, main line batteries, local or intermediate ground wires, and main line ground wires. The switchboards are set out from the wall and every connection is entirely visible. A more opportune time and place to learn this part of the work is not to be had. Mr. Rainier, dean of the Railway and Commercial Telegraph Department, lectures to all advanced students relative to this work, and he requires students to make connections as they should be made, explaining to the others the reasons therefor. An idea of the value of this part of our course may be had when you consider the fact that all graduates of our school know more about this feature of the work than seventy-five out of each hundred telegraph operators in actual service.

Typewriting—A Special Feature of Our Course.

Typewriters are now used so extensively in receiving messages from the wire that telegraph operators must be able to manipulate them before they can secure a real good position.

The Postal and Western Union Telegraph Companies require their operators to use them in offices of any size and a great number of railroads are adopting them. Indeed, committees from the annual telegraphers' conventions have been appointed to investigate and report on the feasibility of using them in receiving telegraphic train orders.

The appearance of a typewritten telegram is neater and more can be accomplished by the use of the typewriter. The work is also less laborious.

We teach typewriting upon the two leading makes of machines —Underwood and L. C. Smith—and give our students their choice. We keep our machines new and in good repair and have only the latest models of each kind. We believe that our institution is the

Digitized by Google

only one which grants free use of typewriters with the telegraphic course.

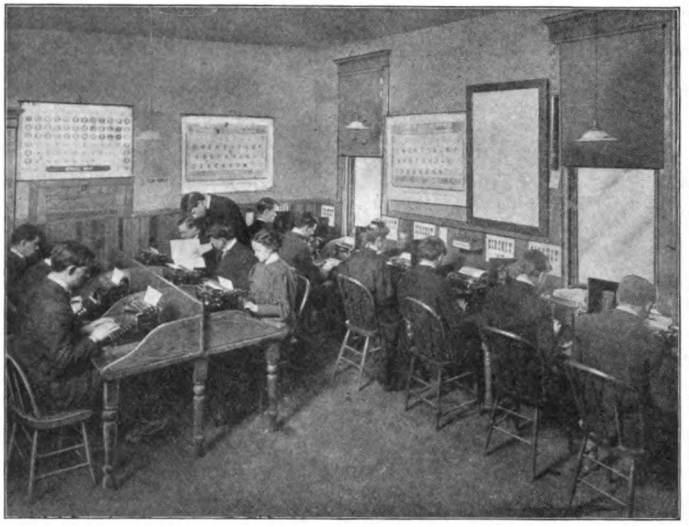

View of Typewriting Department.

No extra charge is made for the use of telegraph apparatus with any tuition, and a five months' course of typewriting is included, free of charge, with the scholarship tuition in the wire work.

Penmanship.

Legible handwriting is absolutely essential for a successful telegraph operator. Realizing this we decided that Penmanship must be made a regular feature of our course and our teachers were therefore instructed to make a study of this in order that they might teach drill penmanship successfully. The result of their efforts, together with the text-book issued by the A. N. Palmer Co., known as the Palmer Method of Business Writing, has been most pleasing. One-half hour daily is devoted entirely to the practice of Penmanship, and every student is required to work faithfully at this drill. No additional tuition is charged for this drill work and what we give is usually sufficient to make a good penman out of an ordinarily poor writer.

Digitized by Google

Railway Accounting Department—Station Agency Course.

Dean, P. H. Swain.

Assistant, E. F. Rainier.

It was after the earnest solicitation of numerous railway officials for several years that we decided to inaugurate a course in Railway Accounting as applied to Station Agency work. This course is designed to fit the student for filling the position of railway station agent, fully equipping him with the training necessary for handling the business of a railroad, including both freight and passenger traffic. In order to master the business of the average small railway station, one must not only be qualified as a telegrapher, but have a general knowledge of freight and passenger traffic. He must have a knowledge of business forms, of railway bookkeeping and of the freight traffic business, and some acquaintance with the interstate commerce laws. Of course, it is possible for one working as telegrapher at a station to become familiar with this work and it is from the telegraph ranks that most agents receive their appointments, but we are endeavoring to cover that work here and to this end we are meeting with great success. Every subject pertaining to the business of the small railway station is covered. The course of study embraces: How to accept freight for shipment; how to prepare bills of lading; how to classify, rate, bill, abstract, expense; how to issue corrections, over, short, damaged, refused and unclaimed reports, and how to keep freight received, prepaid, advance, and cash books, how to look up passenger fares, issue tickets, make ticket reports, check baggage, etc., also how to make daily and monthly balances of accounts. Freight, passenger and baggage department rules are also taught and discussed in class work, enabling the student to become thoroughly familiar with all details as found at a local railway station.

Too much could not be said relative to the dean of this department, Mr. P. H. Swain. He has had years of experience as agent and operator and taught in this school for a period of one year some five years since. Mr. Swain is a most successful teacher and resigned a splendid position as agent for the Grand Trunk Western Railway to come here and take charge of this department. We consider that we were exceedingly fortunate in securing Mr. Swain's services. It was necessary to induce him to resign one of the best agencies on the Grand Trunk Western Railway to accept this position.

Digitized by Google

Salaries.

The salaries paid wire and wireless operators, and station agents, depend in a great measure upon the capability and trustworthiness of the employee. The salaries of wireless operators range from the equivalent of $50.00 to $150.00 per month. Wireless operators are frequently paid liberal commissions upon the business handled by them, and their living expenses while aboard ship are also included. The salaries of wire or Morse telegraphers range from $50.00 to $150.00 per month and the salaries of station agents from $60.00 to $200.00 per month.

Not only do all these vocations pay splendid wages, but they offer excellent opportunities for advancement.

Our Home Study Course.

In view of there being a number unable to take up the work at our resident school, we have adopted the National Automatic Telegraph Transmitter for home study instruction, believing it to be the best proposition of the kind for this purpose.

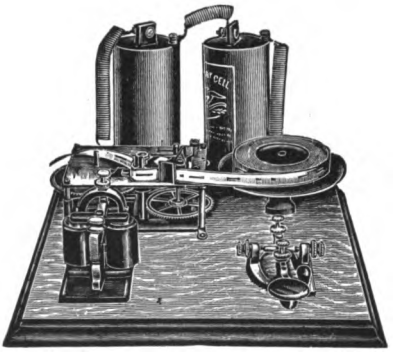

The device as shown in the cut herewith consists of a key and sounder, transmitter, and tape reel—all on polished oak base. Each complete set consists of the articles just spoken of, together with two cells of dry batteries, a copy of THE TELEGRAPH INSTRUCTOR and twenty-seven records, which contain approximately 10,000 words. These records consist of beginning exercises, newspaper reports, train orders, commercial and railway messages, wire conversation, market reports, service messages, etc.

If you are interested in learning wireless telegraphy, as well as wire, the transmitter is equipped with a wireless attachment called the Vibrophone. With this instrument it is possible to receive and become familiar with actual wireless vibrations as received at wireless stations. This instrument reproduces the dots

Digitized by Google

and dashes distinctly and perfectly to the ear of the operator, yet are not distinguishable to a bystander. After a short time spent in mastering the difference between the sound of an ordinary Morse sounder and the wireless code as receivd by the Vibrophone, students are enabled to become rapid and efficient receivers.

While, as a matter of fact, no legitimate correspondence school can contend their work to be equivalent to that given in a good resident school, we can conscientiously say that this home study course is very complete and is, in our opinion, superior to the work given at some resident schools.

The cost of a complete Automatic Transmitter is $20; same without key, sounder and batteries, $16.50. The cost of the complete Automatic Transmitter with Vibrophone is $26; or same without key, sounder and batteries, $22.50. All outfits are sold subject to approval; that is, they may be retained fifteen days, and, if not entirely satisfactory, returned and the entire amount paid, will be rebated.

A descriptive prospectus of this device will be mailed upon application. The best evidence of the merit of this almost marvelous instrument is the fact that out of over 3,000 sold, only a very, very few have been returned, and all have been sold subject to approval.

Our Special Offer: To those who will not be able to take up the work at our resident school for some time to come, we will send either outfit on receipt of price, and if reasonable care is given the outfit, will apply one-half of this amount toward a scholarship tuition when returned to us. One can thereby have the use of the device and be enabled in this way, to shorten his stay in Valparaiso. This proposition is certainly worthy of consideration.

Digitized by Google

ows

Digitized by Google

Digitized by Google

Digitized by Google

Digitized by Google

UNIVERSITY OF CALIFORNIA LIBRARY

THIS BOOK IS DUE ON THE LAST DATE
STAMPED BELOW

AUG 4 1917

FEB 20 1918

AUG 3 1918

NOV 30 1918

OCT 31 1921

MAY 27 1924

JUL 2[illegible] 1926

FEB 28 1952

INTER-LIBRARY LOAN

Jan 17 '52S

30m-1,'15

Digitized by Google

YC 19568

Digitized by Google

Digitized by Google